3313

WANG

Digital Drum Plotter

Model: 2272

Customer Engineering
Product Maintenance Manual

741-0455

PREFACE

The purpose of this manual is to provide the Wang-trained Customer Engineer (CE) with instructions to operate, troubleshoot and repair the Digital Drum Plotter.

Information Service Notice no. 120 is located at the back of the manual.

Second Edition (August 1984)

This reprint edition is the converted number for and obsoletes document number 729-0455. It also incorporates Immediate Service Notice (ISN) P/N 729-0457. This edition of the manual may be used only for the purpose stated in the Preface. Updates and/or changes to this document will be published as Publications Update Bulletins (PUB's) or subsequent editions.

This document is the property of Wang Laboratories, Inc. All information contained herein is considered company proprietary, and its use is restricted solely to assisting the Wang-trained CE in servicing this Wang product. Reproduction of all or any part of this document is prohibited without the prior consent of Wang Laboratories, Inc.

© Copyright WANG Labs., Inc. 1976, 1984

TABLE OF CONTENTS

SECTION 1 INTRODUCTION

1.1 SCOPE 1-1
1.2 DESCRIPTION 1-1
1.3 MODEL 2272 TECHNICAL CHARACTERISTICS 1-4

SECTION 2 INSTALLATION

2.1 SITE CONSIDERATION 2-1
2.2 UNPACKING PROCEDURE 2-1
2.3 UNIT INSPECTION PROCEDURE 2-1
2.4 OPERATOR CONTROLS AND INDICATORS 2-2
2.4.1 CONTROL PANEL 2-2
2.4.2 REAR OF UNIT 2-4
2.4.3 PLOTTER DRUM 2-4
2.5 DYNAMIC CHECKOUT 2-4

SECTION 3 OPERATION

3.1 CONTROL PANEL 3-1
3.1.1 RUN LAMP 3-1
3.1.2 PEN SWITCH 3-1
3.1.3 HOME SWITCH 3-1
3.1.4 CLEAR SWITCH 3-1
3.1.5 PLOT AXIS SELECTION 3-2
3.1.6 SET HOME/LIMITS MODE SWITCH 3-2
3.1.7 SLEW MODE SWITCH 3-4
3.1.8 PLOT MODE SWITCH 3-5
3.2 OPERATION OF 2272 VIA 2200 CPU 3-5
3.2.1 PLOT STATEMENT 3-5
3.2.2 2272 DIAGNOSTIC 3-6
3.2.3 SPECIAL PLOT CODES 3-6
3.2.3.1 Pen Selection HEX(E1), HEX(E2), HEX(E3) 3-6
3.2.3.2 Set Home HEX(E4) 3-7
3.2.3.3 Power On/Set Home HEX(E5) 3-8
3.2.3.4 Binary Plot Vector (E0), Short Binary Plot Vector (E6) 3-9
3.2.3.5 Hex Code For Pen Up (HEX(0E)), Pen Down (HEX(0F)), Reset (HEX(FA)) 3-10
3.2.3.6 Slewing 3-14
3.2.3.7 Selection of Left and Right Limits, Home 3-14

SECTION 4 THEORY OF OPERATION

(INFORMATION TO FOLLOW)

SECTION 5 ADJUSTMENT, REMOVAL AND REPLACEMENT PROCEDURES

5.1	INTRODUCTION	5-1
5.2	ELECTRICAL ADJUSTMENTS	5-1
5.3	MECHANICAL AND ELECTROMECHANICAL ADJUSTMENT, REMOVAL/ REPLACEMENT INDEX	5-2
5.3.1	ADJUSTMENT GUIDE	5-3
5.3.2	PAPER GUIDE	5-4
5.3.3	PEN AXIS INCREMENT ADJUSTMENT	5-5
5.3.4	PAPER DRIVE ASSEMBLY	5-7
5.3.5	PAPER SPROCKET AND SPROCKET COVER ASSEMBLIES	5-9
5.3.6	PHOTOCELL/HOME POSITION ALIGNMENT	5-10
5.3.7	CARRIAGE ASSEMBLY	5-13
5.3.8	CARRIAGE DRIVE ASSEMBLY	5-15
5.3.9	CARRIAGE ARM ASSEMBLY	5-17
5.3.10	PEN/SOLENOID ASSEMBLY	5-19
5.3.11	ELECTRICAL CHASSIS REMOVAL/REPLACEMENT	5-21
5.3.12	SIDE COVER REMOVAL/REPLACEMENT	5-21

SECTION 6 MAINTENANCE

6.1	INTRODUCTION	6-1
6.2	DIAGNOSTIC	6-1
6.2.1	DIAGNOSTIC HOME POSITION SETUP	6-1
6.2.2	OUTPUT SYSTEM DIAGNOSTIC	6-2
6.2.3	2272 DIAGNOSTIC	6-2
6.3	PREVENTIVE MAINTENANCE	6-2
6.3.1	VISUAL CHECKS	6-2
6.3.2	ADJUSTMENTS	6-2
6.4	TROUBLESHOOTING	6-2

SECTION 7 ELECTRICAL SCHEMATICS

7.1	INTRODUCTION	7-1
7.2	LIST OF ELECTRICAL SCHEMATICS	7-1
7.3	SIGNAL RUN LIST	7-1

SECTION 8 MECHANICAL ASSEMBLY DRAWINGS

8.1	INTROCUTION	8-1

APPENDIX A ASCII CHART OF PLOTTER CONTROL CODES A-1

APPENDIX B PLOTTER MNEMONICS B-1

SECTION 1 INTRO-DUCTION

SECTION 1
INTRODUCTION

1.1 SCOPE

This manual describes the Model 51/53/51M/53M Digital Drum Plotter manufactured by Wang Laboratories, Inc.

General information, detailed theory of operation and maintenance routines are included to enable Customer Engineering personnel to maintain the plotter.

The manual is arranged in the following manner:

SECTION 1 - INTRODUCTION: Provides the reader with the scope of this manual and a general description of the plotter.

SECTION 2 - INSTALLATION: Contains unpacking and installation instructions for the plotter.

SECTION 3 - OPERATION: Describes the function of all operator controls and indicators including the basic 2200 CPU operations for outputting data.

SECTION 4 - THEORY OF OPERATION: Contains descriptions of the mechanical assemblies and the printed circuit board electronics.

SECTION 5 - ADJUSTMENTS, REMOVAL AND REPLACEMENT PROCEDURES.

SECTION 6 - MAINTENANCE: Includes diagnostics, preventive maintenance and troubleshooting tables.

SECTION 7 - ELECTRICAL SCHEMATICS: Contains a complete set of schematics, wiring and interconnection diagrams.

SECTION 8 - MECHANICAL ASSEMBLY DRAWINGS: Allows the user to identify any part of the plotter.

1.2 DESCRIPTION (SEE FIGURE 1-1)

The Digital Drum Plotter is available in the following configurations:

MODEL	DESCRIPTION	MARKETED AS
51	SINGLE PEN ENGLISH UNITS	2272-1
53	TRIPLE PEN ENGLISH UNITS	2272-2
51M	SINGLE PEN METRIC UNITS	2272-1M
53M	TRIPLE PEN METRIC UNITS	2272-2M

The Digital Drum Plotter provides point, line and alphanumeric plotting capacity to any Model 2200 System that has plot capability. The drum plotter is controlled by an 8080 microprocessor, which includes a 512 byte RAM memory that is used to buffer plot information sent from the Model 2200 CPU. Vectors take 5 bytes; alphanumeric characters and plot control characters are stored as is.

The manual control panel on the Digital Drum Plotter provides a number of convenient control functions which include: manual slewing of the pen and paper, four quadrant axis rotation selection, conveniently setable HOME position (X = 0, Y = 0 origin) and pen and paper movement limits to any position on the plotting surface, plot interrupt and automatic return facility, and pen up override.

Plotting is controlled with the 2200 BASIC language PLOT statement. The plotter has an input buffer which allows a number of plot vectors and alphanumeric plotting data to be stored prior to plotting, thus providing overlap between plotting and CPU processing. The Model 2272 Plotter has built-in alphanumeric character generation capability which plots a standard 64 character ASCII set in 15 selectable character sizes. A zero reference parameter (HOME) permits quick resetting of the pen and paper position to any manually set origin, either under manual or program control. Additional plot codes are available to allow efficient plotting of prestored plot information, special lettering and symbols via binary plot vectors and to perform plot initialization functions under program control.

Manual controls permit setting the home position coordinate axis to one of four orientations accommodating plots of many shapes. Manual controls also permit slewing the pen position as desired, placing the pen in the 'up' position and clearing the plotter buffer.

Both English and metric versions plot with interchangeable pens; the Model 2271-1 (-1M) has a single pen assembly and the Model 2272-2 (-2M) has an optional three pen carriage assembly. The 16 inch (40.6 cm) plotting axis is covered by a cable driven pen assembly; the 160 inch (406 cm) axis is operated by the pinfeed paper mechanism. The English version drum plotter supports approximately 3200 increments of pen movement in the left-right direction (16 inches x 200 steps/ inch) and 16383 increments of paper movement in both the forward and reverse direction if HOME position is not reset; there is no restriction on paper movement if HOME position is reset. The metric plotter has approximately 4064 increments in the left-right direction and 16383 increments of paper in the forward-reverse direction if HOME position is not reset.

The standard plotter (metric or English) is 100% compatible with the 2212 protocol except that 64 ASCII plotting characters are supported instead of 48. Options will include a three pen carriage assembly, additional microcode (PROM) chips to support expanded built-in plotting functions and an automatic paper roll feed handler which will mount on the rear of the plotter.

The plotter connector is designed to connect to the 2221W I/O controller board in the 2200 chassis. The plotter drum supports 18 inch (45.72) wide platen fed paper [17 1/2" (44.45 cm) pin to pin] which rolls forward and backward over the drum.

1.3 MODEL 2272 TECHNICAL CHARACTERISTICS

Plotting Rate: (English)	1.5 inches/sec to 4.5 inches/sec vertical or horizontal 1.5 inches/sec to 6.4 inches/sec diagonal
Plotting Rate: (Metric)	3 cm/sec to 9 cm/sec vertical or horizontal 3 cm/sec to 12.7 cm/sec diagonal
Plotting Area:	16 inches (40.6 cm) wide by unlimited length

Alphanumeric Plotting:	64 UASCII Characters, 15 Selectable Character Sizes and Variable inter-character spacing
Programmable Control Codes:	See Appendix A
Plotting Increment:	.005 inch per step .01 cm per step
Plotting Accuracy:	.01 inch + .1% per inch of plotting distance cm + .1% per cm of plotting distance
Paper Dimensions:	Continuous perforated roll paper (18" edge to edge, 400 ft)
Pen:	Ball point, fiber tip, technical ink pens.
Manual Plotter Controls and Indicators:	On - Off switch Mode Selection - 3 pushbuttons (PLOT, SLEW, SET HOME/LIMITS) Manual Slew Control - 5 pushbuttons (↑, ↓, ←, →, HOME) Axis Rotation Selection - 4 pushbuttons Pen Up Override - 1 pushbutton Clear - 1 pushbutton Run Indicator Light
Dimensions:	Height: 10.2 inches (26 cm) Width: 33 inches (84 cm) Depth: 14 inches (36 cm)
Operating Temperature:	50° to 90°F (10° to 32°C)
Humidity:	30 to 80% Relative, non-condensing

Power Source:	50/60 Hz ± 1/2 cycle 115 or 230 VAC ±10% 230 WATTS Internal Selection (See Section 6)
Weight (Approx.):	90 lbs. (41 kg)
Storage Temperature:	-40° to 130°F (-40 to 55°C)
Storage Humidity:	0 to 90% Relative, non-condensing

SECTION 2 INSTAL-LATION

SECTION 2
INSTALLATION

2.1 SITE CONSIDERATIONS

The ventilation fan intake screen should not be obstructed by any objects which could reduce normal airflow. Consideration should be given to paper stacking in front of and behind the plotting surface. For environmental temperature, humidity, etc., see Technical Characteristic in paragraph 1.3.

2.2 UNPACKING PROCEDURES

1) Open packing carton by cutting tape on seams.

2) Remove top section of instapack.

3) Lift printer out of box and place on table.

4) Remove tape from carriage assembly.

2.3 UNIT INSPECTION PROCEDURE

1) Remove side covers and electrical chassis (Section 5.3.11, 5.3.12).

2) With the interior completely visible, inspect all parts of the plotter. Look for any unusual conditions. The following list is a suggested procedure. If any faults are found that require replacement or adjustment, refer to Section 5 of this manual.

WARNING

No power is to be applied to the plotter during this inspection.

(a) Check for damaged or loose parts.

(b) Check for printed circuit boards loose in their connectors.

(c) Check the cable connectors and fingerboards to insure they are firmly seated in their sockets.

2.4 OPERATOR CONTROLS AND INDICATORS

2.4.1 *CONTROL PANEL (FIGURE 2-1)*

NOTE:

Refer to Section 3.1 for more detail.

POWER ON LAMP: Illuminates when power is on.

RUN LAMP: Illuminates when plotter is in PLOT mode and processing plot vectors and characters.

PEN SWITCH: Forces pen(s) into unconditional "up" position when switch is depressed. When switch is up, pen is under program control.

HOME SWITCH: Move pen and carriage to currently selected home position.

CLEAR SWITCH: When plotter is in slew mode or set home/limits mode and the CLEAR switch is depressed, the plotter buffer is cleared. The clear switch is inoperative when the plotter is in the plot mode.

Y
└X SWITCH: 0 degree axis rotation.

┌X
Y SWITCH: 90 degree axis rotation.

X
└Y SWITCH: 180 degree axis rotation.

┌Y
X SWITCH: 270 degree axis rotation.

SET HOME/LIMITS MODE SWITCH: When depressed, operator can reset Home position and the pen and carriage movement limits.

SLEW MODE SWITCH: When depressed, operator can manually position pen(s) left or right and move the paper forward or backward using direction switches (→, ↑, ←, ↓,) and Home position switch.

PLOT MODE SWITCH: When depressed, plotter input is controlled by CPU.

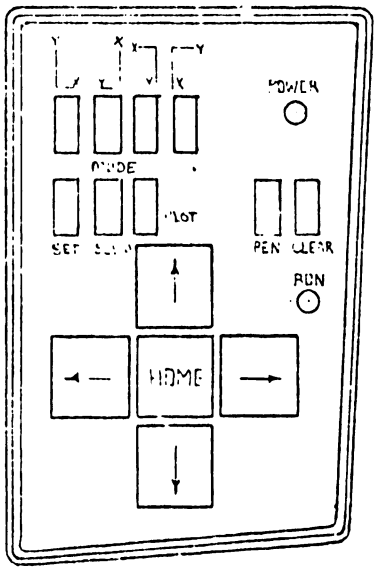

FIGURE 2-1 CONTROL PANEL

FIGURE 2-2 REAR VIEW OF PLOTTER

2.4.2 *REAR OF UNIT (FIGURE 2-2)*

ON/OFF SWITCH: Switch AC power to unit located on lower backside of plotter.

MAIN FUSE: 3 amp (SB) 250 volt fuse for 115 VAC or 1.5 amp (SB) for 230 VAC which fuses entire unit.

I/O CONNECTOR: 36 pin amphenol connector to connect plotter to CPU using an I/O cable.

2.4.3 *PLOTTER DRUM*

PAPER SPROCKET ADJUSTMENT KNOBS: Adjust sprocket for proper paper width.

2.5 DYNAMIC CHECKOUT

1) Connect power cord to 115 or 230 volt outlet as specified. Insure that unit has the proper input.

2) Connect I/O cable to the I/O connector on rear of the plotter and the connector on the 7079 I/O control card in CPU for 2200S/T units; connect I/O cable to the plotter and to printer connector on the 2200E/F units.

3) Load paper.
   (a) Open sprocket covers.
   (b) Fit the feed holes of the paper into the pins of the sprocket wheels and close the covers.

4) Turn power on.

5) Insure that cooling fan is running.

SECTION 3 OPERATION

SECTION 3
OPERATION

3.1 CONTROL PANEL

3.1.1 *RUN LAMP*

The run lamp is an LED which illuminates when the plotter is processing plot vectors and characters in the PLOT mode. It is extinguished when the plotter is not plotting because there is either no more information in the buffer to plot or the user has interrupted plotting by placing the plotter in the SLEW mode or the SET HOME/LIMITS mode.

3.1.2 *PEN SWITCH*

The pen switch unconditionally forces the plotter pen(s) into the UP position when the pen switch is depressed. The CPU program controls the pen(s) when the pen switch is up.

3.1.3 *HOME SWITCH*

When the HOME switch is depressed, the pen and carriage will be moved at maximum ramp rate to position the currently selected pen at the currently selected home position. When power is first turned on, home position is initially set to a default value of current drum rotation position and pen 1 centered on its axis.

3.1.4 *CLEAR SWITCH*

The plotter buffer is cleared when the plotter is in the slew mode or set home/limits mode and the CLEAR switch is depressed. That is, all plot vectors and commands currently stored in the plotter buffer but not yet executed will be cleared without being executed.

3.1.5 *PLOT AXIS SELECTION*

A set of four ganged pushbuttons are used to manually set the desired orientation of the X and Y plot axis on the drum plotter. Axis rotation is controlled by the 8080 microprocessor used in the plotter. The following X and Y plot axis combinations are used:

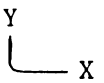

+X = Pen Right Movement
+Y = Paper Out Movement

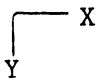

+X = Paper Out Movement
+Y = Pen Left Movement

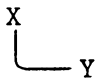

+X = Pen Left Movement
+Y = Paper In Movement

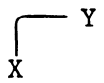

+X = Paper In Movement
+Y = Pen Right Movement

3.1.6 *SET HOME/LIMITS MODE SWITCH*

When the SET HOME/LIMITS mode switch is depressed, the operator can reset: HOME position, left and right pen movement limits, and the in and out paper movement limits. The HOME position represents the X = 0, Y = 0 axis of a graph. The movement limits represent the points beyond which the pen and paper are not allowed to move on a plot.

Any plotting vectors sent by the 2200 which go beyond the currently defined limits will be truncated automatically.. It is also important to have these limits theoretically defined on the drum plotter since it moves at high (ramped) speeds and encountering mechanical limits at these speeds could result in loss of current position accuracy.

When in SET HOME/LIMITS mode, the positioning (←↑→↓) and HOME pushbuttons are used to set these positions as follows:

		push	←	-- Sets left pen limit to current position of pen 1
hold down	CLEAR	push	←	-- Clears current left pen limit restores it to true left margin (i.e., mechanical left margin + ΔX) (ΔX = 3 pen offset)
		push	→	-- Set Right pen limit to current position of pen 1
hold down	CLEAR	push	→	-- Clears current right pen limit, restores it to true right margin (i.e., mechanical right home)
		push	↑	-- Set limit for paper feeding out to the current position of drum rotation
hold down	CLEAR	push	↑	-- Clears current paper out limit. Removes any limit condition.
		push	↓	-- Set limit for paper feeding into the current position of drum rotation
hold down	CLEAR	push	↓	-- Clears current paper in limits. Remove any limit condition.

push HOME -- Resets Home point (X = 0, Y = 0) position of pen 1 and drum. (Adjusts all limits relative to this new reference point, this is transparent to the user)

Default -- when power is first turned on the default settings for HOME and limits will be:

Paper In -- No Limit
Paper Out -- No Limit
Left Pen Margin -- True left margin
(Mechanical limit + ΔX, when ΔX allows all pens to plot within surface, i.e., offset for 3 pens)
Right Pen Margin -- True right margin of plotting surface
Home — Current Drum rotation position and pen 1 at midpoint position.

The 2200 RESET will not affect margins and home. The CLEAR signal will clear the limits. (CLEAR must be a D.C. level.)

3.1.7 *SLEW MODE SWITCH*

When the slew mode switch is depressed, the user can use the manual position pushbuttons (→, ↑, ←, ↓, HOME) to position the pen left or right and move the paper in and out. The slew mode may be used to set the limits and the home position prior to plotting. One additional feature of slew mode is that it allows a plot to be temporarily interrupted, (to allow, for example, the user to slew out the paper and examine the plot). If the slew mode switch is depressed during a plotting operation, the plot is temporarily halted and the user may then slew the paper out, etc. When the system is returned to the PLOT mode the paper and pen are automatically repositioned and plotting resumes, unless the system has been CLEARED.

3.1.8 *PLOT MODE SWITCH*

In the PLOT mode, all control pushbuttons on the plotter control panel are inactive (i.e., CLEAR, →, ↑, ←, ↓ and HOME). This is the normal mode of operation when plotting is done. In the plot mode the plotter will only receive plot commands from the 2200 and plot them.

3.2 OPERATION OF 2272 VIA 2200 CPU

3.2.1 *PLOT STATEMENT*

The Model 2272 Drum Plotter is primarily controlled with one BASIC statement. This plot statement has the following general form:

PLOTTER STATEMENTS

```
                                  U
                                  D
                                  S
PLOT [expr 0]<[expr 1], [expr 2]  C                    > ,
                                  R
                                  "literal string"
                                  a var

                                   plot arg

          <[expr 1],[expr 2],[plot arg]>...
```

Example: 100 PLOT<X,Y,"VALUE">,<40,60,A$>

Move plotting carrier Δx (expr 1) and Δy (expr 2) increments, plot [expr 0] times according to plot argument.

U = pen up; D = pen down; S = set horizontal (expr 1) and vertical (expr 2) spaces; C = set character size; R = rest to zero; literal string, a var = plot alphanumeric labels; arg = argument; a var = alpha variable; expr = numeric expression.

3.2.2 *2272 DIAGNOSTIC*

See Section 6.2.3.

3.2.3 *SPECIAL PLOT CODES*

The Model 2272 Plotter has a number of special plot codes which are useful in performing special plotting requirements such as customized lettering or symbol generation, generation of plots which are permanently stored as data and repetitively retrieved and plotted.

The special plot codes are:

HEX (E0) — Binary Plot Vector
HEX (E1) -- Select Pen 1
HEX (E2) -- Select Pen 2
HEX (E3) — Select Pen 3
HEX (E4) -- Set Home
HEX (E5) — Power On Set Home
HEX (E6) -- Short Binary Plot Vector

HEX (0E) -- Pen Up
HEX (0F) -- Pen Down
HEX (FA) -- RESET (Return to Home)

3.2.3.1 Pen Selection HEX (E1), HEX (E2), HEX (E3)

Pen selection is accomplished by transmitting codes HEX(E1), HEX(E2), or HEX(E3) to the plotter to select Pen 1, Pen 2, or Pen 3 respectively.

```
Example:  100 PLOT < ,, HEX(E1)>      (Select Pen 1)
          100 PLOT < ,, HEX(E2)>      (Select Pen 2)
          100 PLOT < ,, HEX(E3)>      (Select Pen 3)
```

When the plotter is first turned on, Pen 1 is always automatically selected. Thereafter other pens can be selected under program control by the appropriate codes.

When a new pen is selected, the plotter automatically does a pen up, moves the pen mount the appropriate offset distance positioning the newly selected pen to the current plotting position, and then restoring the pen to the previous up or down state.

3.2.3.2 Set Home HEX(E4)

This code duplicates the function of setting the plotter home position (X=0, Y=0) which can be done manually via the plotter control panel. The home position (X=0, Y=0) is set to the position at which the plotter pen and drum are currently positioned by the following command.

```
100 PLOT < ,, HEX(E4)>
```

This operation can be extremely useful when done under program control if for instance it is desired to do a series of plots automatically on successive sections of paper. When one plot is completed, the program can be designed to return to home on the current plot, position up to the next portion of paper and reset the home position as follows:

```
100 PLOT < ,, R >                          (Return to Home position)
110 PLOT 11<0, 200, U>, < ,, HEX(E4)>      Move the paper out 11 inches (11 x
                                           200 increments) to the next plot
                                           area and reset the home position.
```

It should be noted that although additional plots could be made without resetting the home position it is good practice to RESET to Home position because:

(a) It is often more convenient and flexible to utilize the return to home position operation in plotting programs and utilities as it allows more modularity in plotting subroutines.

(b) The plotter automatically keeps track of the current position of the plotter relative to home. The maximum displacement allowable is 16,383 increments (81.9 inches). Beyond that displacement, the home position must be reset or erroneous plotter operation can occur.

3.2.3.3 Power On/Set Home HEX(E5)

This operation essentially duplicates the operation performed by the plotter when it is first turned on. That is:

(a) It moves the pen mount to the right until it encounters the mechanical right margin of the plotter and then positions the pen mount back to the exact center of the plotting surface for pen number 1 (8" from each margin).

(b) It selects pen 1 and retracts all pens to the up position.

(c) It sets the home position to this point.

(d) It sets up default limits:

Pen left margin - left edge of plotter surface
Pen right margin - right edge of plotter surface
Paper in limit - no limit
Paper out limit - no limit

Prior to plotting, the major manual requirement that remains is merely to insure that the paper is fed out to the proper position and the axis rotation is properly set.

Example: 100 PLOT < ,, HEX(E5) >

3.2.3.4 Binary Plot Vector (E0), Short Binary Plot Vector (E6)

The 2200 PLOT command provides the most generally useful means of controlling the plot vector since it operates to conveniently allow BASIC numeric variables and expressions to specify plot vector increments. However, it can be occasionally useful and efficient to store and transmit plot vector pen/paper movements in a compressed binary format. This could be useful when doing special lettering, symbol generation, or if it is desired to use a prestored set of plot vectors, for example, to generate an axis or chart. The 2272 supports two binary plot vectors which allows the following character formats to be sent. A five character (byte) vector can specify pen/paper movement to ± 16,383 increments for both X and Y. A three character (byte) binary plot vector which can specify pen/paper movement to ± 127 increments for both X and Y.

BINARY PLOT VECTOR

HEX (E0)	X X	Y Y
character 1	characters 2 and 3 = two-byte two's complement binary representation of ΔX (0 to ±16,383)	characters 4 and 5 = two-byte two's complement binary representation of ΔY (0 to ±16,383)

SHORT BINARY PLOT VECTOR

HEX(E6)	X	Y
character 1	character 2, a one-byte two's complement binary representation of ΔX (0 ±127)	character 3, a one-byte two's complement binary representation of ΔY (0 ±127)

Plotter vector movement can be transferred in binary format by either the PRINT or PLOT commands. For example:

```
100 SELECT PRINT 415
200 PRINT HEX(E000800040)        (Moves the plotter ΔX=+.64", ΔY=+.32")
                              ΔY = HEX(0040) = +64 increments = .32"
                         ΔX = HEX(0080) = +128 increments = .64"
```

or

```
200 PLOT < ,, HEX(E0FE002000)>
                              ΔY = HEX(2000) = +8192 increments = +40.96"
                         ΔX = HEX(FE00) = -512 increments = -2.56"
```

```
200 PLOT <,, HEX(E612FE)>
                              ΔY = HEX(FE) = -2 increments = -.01"
                         ΔX = HEX(12) = +18 increments = +.09"
```

It should be noted that the five character binary PLOT vector allows specification of vector movements up to 16,383 increments; the PLOT command is limited to 999 increments.

3.2.3.5 HEX Codes for Pen Up (HEX(0E)), Pen Down (HEX(0F)), RESET (HEX(FA))

When using the binary plot vector, it is often useful to specifically place the pen up or down or RESET to Home position prior to or after the movement. The PLOT command uses the operands U and D to indicate pen up or pen down and R to indicate Reset. However, when using the binary PLOT vector, it is necessary to express pen up or down in the hexadecimal codes internally reserved in the 2200 system to express these operations. These are:

HEX(0E) - Pen Up
HEX(0F) - Pen Down
HEX(FA) - RESET to Home Position

The codes can be used before or after plot vectors to move the pen up or pen down or return to Home before or after the movement expressed by the vector. For example:

PLOT VECTOR

```
200 PLOT <,, HEX(0FE0008000400E)>
```

Pen Up
ΔY = + 64 increments
ΔX = +128 increments
Pen Down

or

SHORT PLOT VECTOR

```
200 PLOT <,, HEX(0EE680400F)>
```

Pen Up
ΔY = + 64 increments
ΔX = +128 increments
Pen Down

PLOT VECTOR

```
200 PLOT <,, HEX(FAE000000898)>
```

ΔY = + 2200 increments (11")
ΔX = 0
RESET (Return to Home)

It should be noted that in all the previous examples, binary plot vectors and pen control codes were specified by HEX functions. It is also possible and generally more useful to store one or more binary vectors and pen control codes into an alphanumeric variable and use that as an argument in a PLOT or PRINT statement to transmit the plot data to the plotter. There is one requirement to be met. Trailing

space codes, HEX(20), contained in the variable will not be transmitted. If a binary vector were the last item in variable, and if it's last byte was a HEX(20) it would not be transmitted. To insure against this, several approaches can be taken.

(a) Always use a STR function to specify the number of characters to be sent. For example:

```
100 A$ = HEX(0EE680400FFAE000000898)
110 PLOT   <,, STR(A$,1,11)>
```

(b) Always terminate a sequence by a non-binary vector code (Pen up, Pen down, etc.). The HEX(00) code is particularly useful for this purpose since it will be ignored by the plotter (unless it is part of a binary vector). For example:

SHORT BINARY VECTOR

```
100 A$ = HEX(0EE6802000)
                              null termination code
200 PLOT  <,, A$>
```

or

```
100 INIT (00) A$                    Initialize A$ to all HEX(00) codes
120 STR(A$,1,1) = HEX(0E)           Insert pen up command
130 STR(A$,2,5) = B$                Insert a binary vector from B$
140 PLOT <,, A$>                    Send to plotter
```

In the above example A$ was first initialized to all HEX(00) codes which will be ignored by the plotter, and then plot information is inserted in A$ via the STR function. It should be noted that STR function is used to insert a binary vector contained in B$. If the statement A$ = B$ is used, the remaining space in A$ is filled with trailing space codes (HEX(20)) which will not be transmitted to the plotter.

Routine to build a five byte plot vector (E0)

Assuming X1 and Y1 are integer numeric values less than 16,384, the following program sequence will use the conversion subroutine to form a binary plot vector followed by a pen down code and plot it.

```
100 B$ = HEX(E0)                    (Put binary plot vector code into B$)
110 GOSUB' 50 (X1)                  (Convert ΔX)
120 STR(B$,2,2) = A$                (Place in B$)
130 GOSUB' 50 (Y1)                  (Convert ΔY)
140 STR(B$,4,2) = A$                (Place in B$)
150 STR(B$,6,1) = HEX(0F)           (Place pen down code in B$)
160 PLOT <,, B$>                    (Send out plot vector)
```

Subroutine to generate a one byte two's complement number (for Short Binary Plot Vector)

```
100 GOSUB' 60 (X1)                  X1 = Numeric integer value between
                                         -128 and +127 which will be
                                         converted to 2's complement
                                         and stored in A$
500 DEFFN' 60 (X)
510 BIN(A$) = X                     (Convert to binary)
520 IF SGN(X) <0 THEN 530:RETURN    (Test if negative; Return if positive)
530 XOR(STR(A$,1,1))                (If negative, complement)
540 ADDC(STR(A$,1,1),1)             (Add 1)
550 RETURN
```

Routine to build three byte short binary plot vector and plot it

Assuming X1 and X2 are integer numeric values between -128 and +127.

```
200 B$ = HEX(E6)                    (Put HEX(E6) short vector code in
                                     first byte)
210 GOSUB' 60 (X1)                  (Convert ΔX)
```

```
220 STR(B$,2,1) = A$              (Store ΔX)
230 GOSUB' 60 (Y1)                (Convert ΔY)
240 STR(B$,3,1) = A$              (Store ΔY)
250 STR(B$,4,1) = HEX(00)         (Place Null Code in B$ after vector)
260 PLOT <,, B$>                  (Send Out Short Plot Vector)
```

3.2.3.6 Slewing

Slewing of the pen to the right or left will be automatically terminated when the currently selected pen has reached the limits of the plotting surface which is 16" (40.6 cm) wide. This will prevent selection of the Home position beyond the left and right limits of the plotting surface.

3.2.3.7 Selection of Left and Right Limits, Home

The selection of the left and right limits and Home position is based on the current position of the currently selected pen, which is pen 1 (the left pen) when power is first turned on. If pen 2 (the middle pen) or pen 3 (the right pen) is currently selected, that position would apply.

When selecting a new Home position, the position selected cannot be outside the currently selected left, right, up, or down limits since pen movement beyond the limits is inhibited in plot mode. To prevent this, the 2272 will automatically reposition the pen to the nearest currently selected limit boundary if a Home position outside the limit boundary is selected. The selected Home position will become that boundary position. Since, under most plotting circumstances, the left and right margins will typically remain at the boundaries of the plotting surface and the pen cannot be slewed beyond these boundaries so the selection of a new Home position should not be a frequent concern.

With normal use of the plotter the plotting limits will typically be left at power on default conditions (left margin at left boundary of plotting surface, right margin at right boundary of plotting surface,

no limit for paper in and out) and will not require resetting. It is more typical to change the position of home in conjunction with changing axis orientation, which can simply be done by slewing the pen to the desired position, going into SET LIMITS/HOME mode by depressing that pushbutton and depressing the HOME button. If the user is not certain which pen is currently selected, this can easily be established by slewing the pen right until it stops at the plotting boundary. If the pointer on the pen mount points to 0" on the plotter scale, pen 1 is selected, if it points to .5" pen 2 is selected, if it points to 1" pen 3 is selected. Alternately the user can reinitialize the plotter to default limits and Home position (which reselects pen 1) by either turning the plotter off, then back on again or keying the immediate statement

```
PLOT <,, HEX(E5)>          (EXEC)
```

into the 2200 which reestablishes the power-on default settings.

SECTION 4 THEORY OF OPERATION

SECTION 4

THEORY OF OPERATION

(INFORMATION TO FOLLOW)

SECTION 5 ADJUSTMENT, REMOVAL AND REPLACEMENT PROCEDURES

SECTION 5

ADJUSTMENT, REMOVAL AND REPLACEMENT PROCEDURES

5.1 INTRODUCTION

This section describes the adjustment, removal and replacement of each major mechanical assembly in the MODEL 51/53/51M/53M Drum Plotter.

The electrical section contains voltage and timing adjustment procedures and a listing of all the electrical component boards used in the Model 51/53/51M/53M Drum Plotter.

The mechanical section contains the mechanical and electromechanical adjustment checks, adjustment procedures and removal/replacement procedures.

5.2 ELECTRICAL ADJUSTMENTS (TABLE 5-1)

TABLE 5-1

LEVEL OR SIGNAL	BOARD	LOCATION	MEASUREMENT	ADJUSTMENT
+ 5VR	7073	Pin B_1, 2_1	+ 5 volts $\pm$ .25 volts	R10
+12VR	7073	Pin A_1, 1_1	+12 volts $\pm$ .25 volts	R56

NOTE:

1. Whenever 7073 board is changed, all electrical adjustments must be checked.
2. All timing pots should be secured with Glyptal after adjustment to prevent any change due to vibrations in the printer.

The complement of Electrical Circuit boards used in the Plotter are listed in Table 5-2. Refer to Figure 5-1 for locating the position of electrical circuit boards on the electrical chassis assembly.

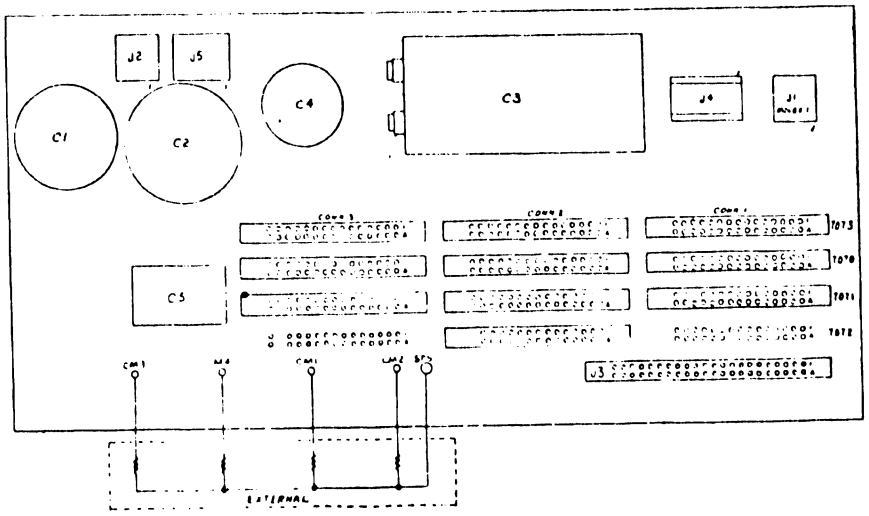

FIGURE 5-1 ELECTRICAL CHASSIS LAYOUT

TABLE 5-2

ELECTRICAL CIRCUIT BOARDS			PART NUMBER
1.	CPU		210-7070
2.	RAM/PROM Memory		210-7071
	PROMS		
	2272-1,2	2272-1M,2M	
	378-2011	378-2007	
	378-2012	378-2008	
	378-2013	378-2009	
	378-2014	378-2010	
3.	Plotter Interface		210-7072
4.	Regulator and Heatsink		210-7073
5.	Motherboard		210-7074

5.3 MECHANICAL AND ELECTROMECHANICAL ADJUSTMENT, REMOVAL/REPLACEMENT INDEX

5.3.1 ADJUSTMENT GUIDE

5.3.2 PAPER GUIDE

5.3.3 PEN AXIS INCREMENT ADJUSTMENT

5.3.4 PAPER DRIVE ASSEMBLY

5.3.5 PAPER SPROCKET AND SPROCKET COVER ASSEMBLIES

5.3.6 PHOTOCELL/HOME POSITION ALIGNMENT

5.3.7 CARRIAGE ASSEMBLY

5.3.8 CARRIAGE DRIVE ASSEMBLY

5.3.9 CARRIAGE ARM ASSEMBLY

5.3.10 PEN/SOLENOID ASSEMBLY

5.3.11 ELECTRICAL CHASSIS REMOVAL/REPLACEMENT

5.3.12 SIDE COVER REMOVAL/REPLACEMENT

5.3.1 *ADJUSTMENT GUIDE*

Table 5-3 is to be used as an adjustment guide. When a subassembly is replaced or in need of adjustment, the adjustment(s) at the top of the table containing an "X" must also be performed.

TABLE 5-3

	paper guide	pen axis increment	paper drive	paper sprocket	sprocket cover	photocell/home position	carriage	carriage drive	carriage arm	pen/solenoid
paper guide	*				X		X	X	X	X
pen axis increment		*				X	X	X	X	
paper drive			*							
paper sprocket			X	*	X			X	X	
sprocket cover				X	*					
photocell/home position						*	X	X		
carriage							*	X	X	X
carriage drive						X	X	*	X	
carriage arm								X	*	
pen/solenoid							X	X	X	*

5.3.2 *PAPER GUIDE (FIGURE 5-2)*

(a) Adjustment Check

1. Surface of both paper sprockets flush ±.008" (.2 mm) with surface of paper guide over 60 degree included angle and within ±.015 (.38 mm) over 11 degree angles.

(b) Adjustment

1. Loosen sprocket shaft adjusting plate mounting screws and center bearing in side plate hole.

2. Loosen paper guide mounting screws and move paper guide in appropriate direction to meet specs.

3. If additional adjustment is required, loosen sprocket shaft adjusting plate mounting screws and move adjustment plate in appropriate direction.

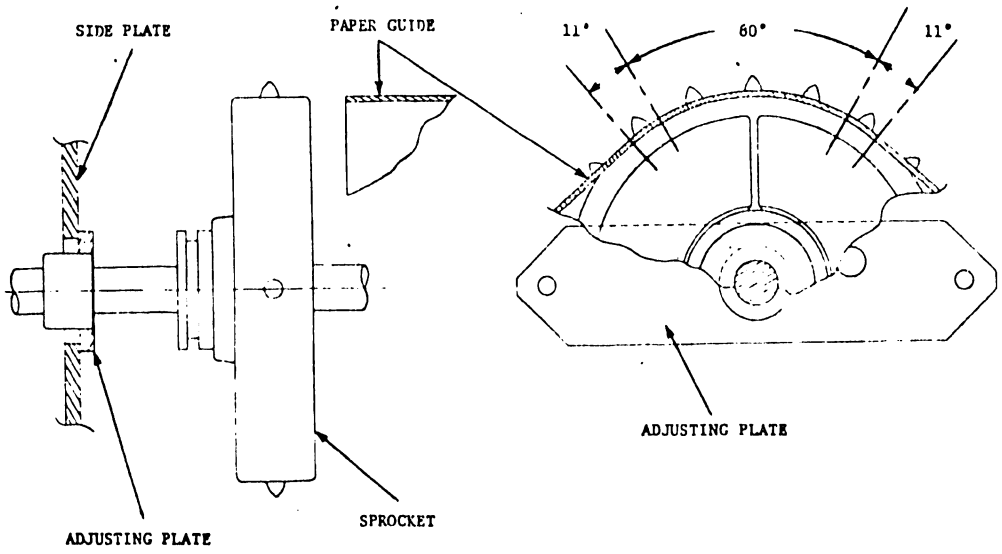

FIGURE 5-2 PAPER GUIDE ADJUSTMENTS

(c) Removal and Replacement

1. Remove side covers, electrical chassis and carriage arm (Section 5.3.9, 5.3.11, 5.3.12).

2. Remove paper sprocket adjustment knob and paper sprocket covers.

3. Remove paper guide mounting screws.

4. Reverse procedure to reassemble.

5.3.3 *PEN AXIS INCREMENT ADJUSTMENT*

(a) Adjustment Check

1. (English) Plot 3200 increments on pen axis. Measured length to be 16 inches $\pm$.005 inches.

   (Metric) Plot 4000 increments on pen axis. Measured length to be 40 cm $\pm$ .01 cm.

(b) Adjustment

NOTE:

It is only necessary to perform Steps 3, 4 below when decreasing the diameter of the drum. To ensure uniformity when increasing or decreasing the diameter of the drum, adjust both sides equally.

1. Loosen locknut on pen drive idler pulley and turn cable tension adjusting screw CCW to release pen drive cable tension (see Figure 5-3).

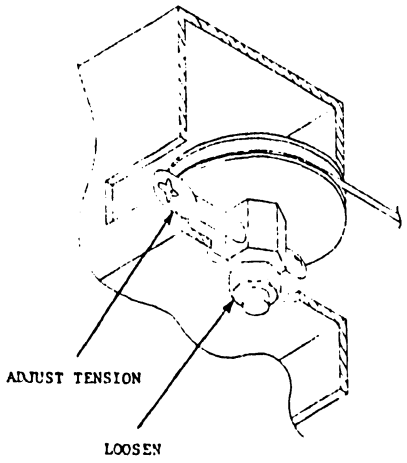

FIGURE 5-3 PEN DRIVE IDLER PULLEY

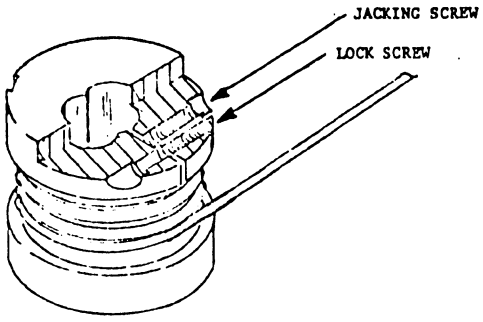

FIGURE 5-4 PEN CABLE DRUM DIAMETER ADJUSTMENT

2. To increase the diameter of the drum, remove the two lock screws shown in Figure 5-4, then turn the jacking screws clockwise to desired location. When jacking is completed, replace the locking screws.

NOTE:

A 1/4 turn on jacking screws will change 15" plotted line by +.005 inch (.13 mm) if diameter is increased and by -.005" if diameter is decreased.

3. To decrease the diameter of the drum, *loosen* the jacking screws slightly; *tighten* the locking screws until the desired diameter is met. Turn the jacking screws back in until they meet the opposite wall of the drum to prevent the drum diameter from decreasing when the cable is retightened.

4. After adjustment is made, see Section 5.3.8 to insure proper cable tension. Glyptal all screws after final adjustment.

(c) Removal and Replacement

Refer to 5.3.8 (c).

5.3.4 *PAPER DRIVE ASSEMBLY (FIGURE 5-5)*

(a) Adjustment Check

1. Using a spring gauge and scale, deflect the middle of the paper drive timing belt .31" or 5/16" (7.9 mm). The gauge should read 1 lb. $\pm$2 oz. (453 gm $\pm$ 57 gm).

2. Using a spring gauge and scale, deflect the middle of the paper stepping motor belt .31" or 5/16" (7.9 mm). The gauge should read 1 lb. $\pm$2 oz. (453 gm $\pm$ 57 gm).

(b) Adjustment

1. Loosen the screw holding the paper drive timing pulley and move in desired direction; retighten the screw.

2. Loosen the screws holding the paper drive motor to the side plate and move in the desired direction; retighten the screws.

(c) Removal and Replacement

1. Remove side covers, electrical chassis (Section 5.3.11, 12).

2. Remove paper drive timing pulley.

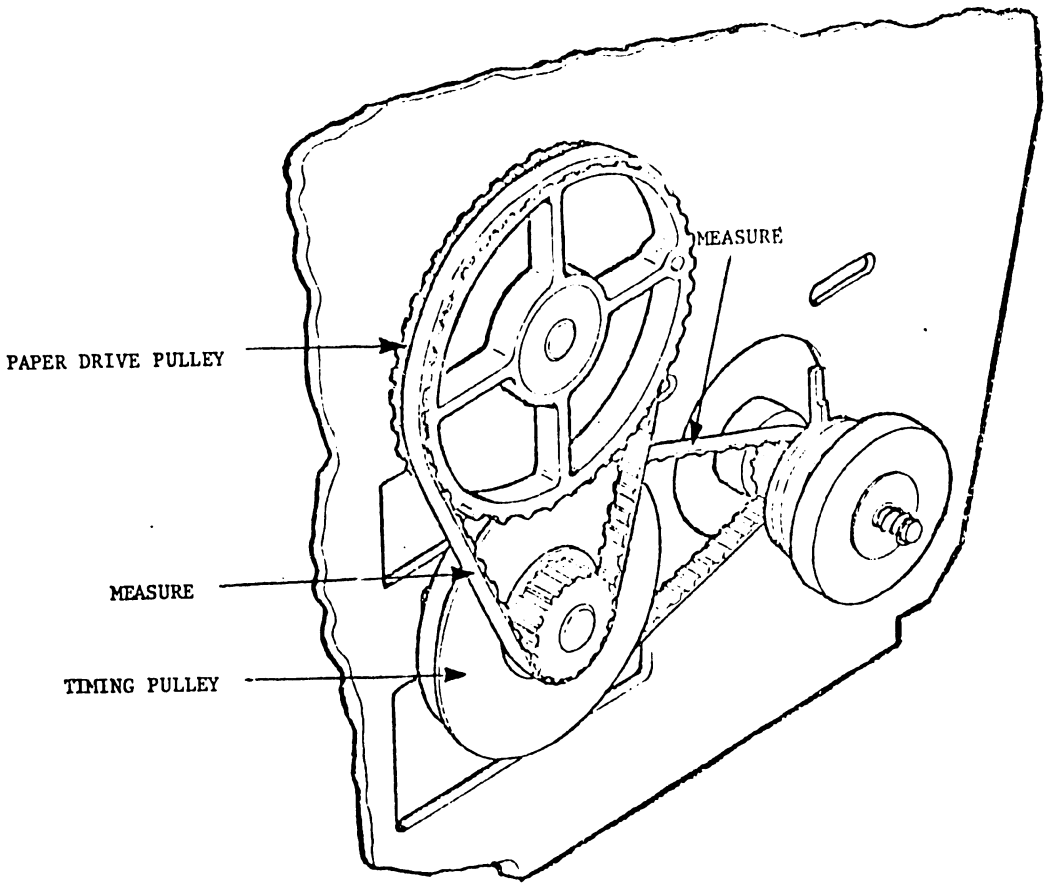

FIGURE 5-5 PAPER DRIVE ASSEMBLY

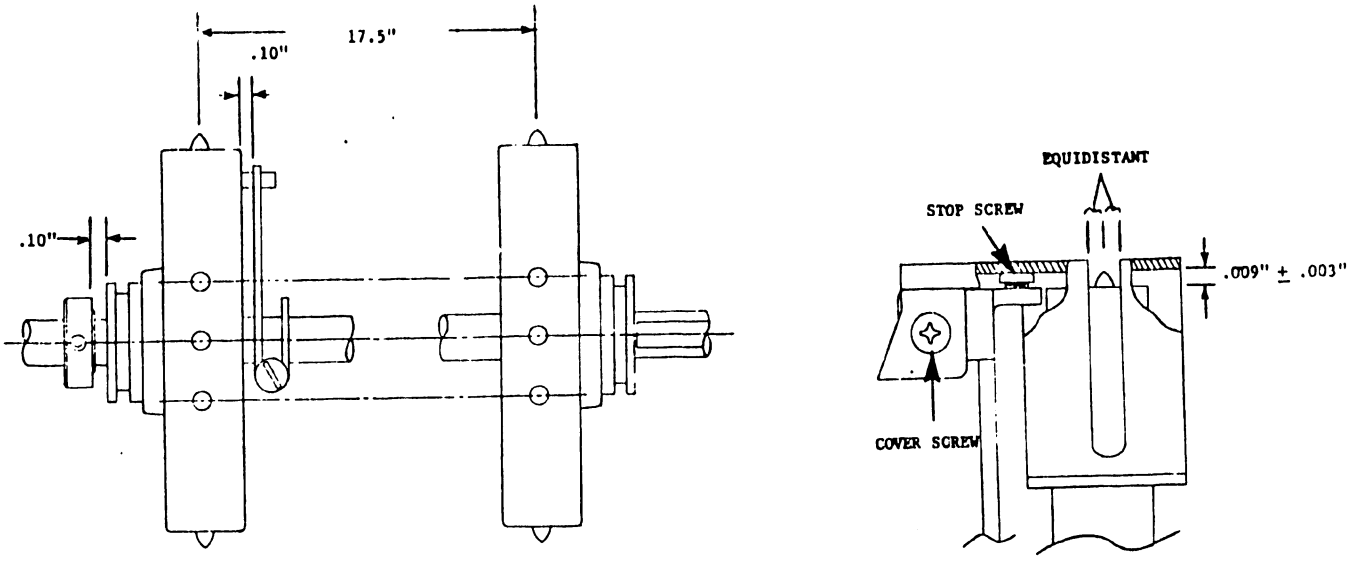

FIGURE 5-6 PAPER SPROCKET ADJUSTMENTS

3. Unplug paper drive motor from electrical chassis.

4. Remove paper drive motor mounting screws and slide gear assembly through hole in side frame.

5. Reverse procedure to reassemble.

5.3.5 *PAPER SPROCKET AND SPROCKET COVER ASSEMBLIES (FIGURE 5-6)*

(a) Adjustment Check

1. With each of the sprocket covers closed, there should be a gap between the sprocket cover and paper sprocket of .009" $\pm$ .003" (.22 mm $\pm$ .07 mm).

2. The teeth of the paper sprocket should be centrally located in the sprocket cover slot.

3. Paper width is adjusted for 17.5" (44.45 cm) between teeth on paper sprockets.

4. Paper sprocket teeth are aligned to feed paper perpendicular to the pen axis so the plot is square and straight within .005" (.13 mm) in 5" (127 mm) and .010" (.25 mm) in 16" (40.64 cm) of plotting. (See carriage arm adjustment in Section 5.3.9).

(b) Adjustment

1. Adjust cover height with locking stop screw. Move screw down until a .010" (.25 mm) gauge begins to pinch between cover and the sprocket rubber.

2. Adjust sprocket cover pivot screws to center teeth. This must be done to both sprocket covers. The pivot screws act as eccentrics to center the cover on the sprocket teeth.

3. Loosen paper sprocket adjustment knob and move paper sprocket for a distance of 17.5" (44.45 cm) between teeth on paper sprockets. Then adjust two sprocket collars for a gap of .10" (2.5 mm) between adjacent surfaces of the sprocket and the two collars.

4. Loosen inside sprocket collar and rotate sprocket so a line connecting the pins from one sprocket to the other sprocket are parallel to sprocket shaft ±.010" (.25 mm).

(c) Removal and Replacement

1. Remove side covers and electrical chassis (Section 5.3.11, 5.3.12).

2. Loosen paper drive timing pulley and then remove paper drive pulley from the paper sprocket shaft.

3. Remove paper sprocket adjustment knob and both paper sprocket covers.

4. Remove two paper sprocket cover shaft mounting screws from side plates and remove shaft and paper sprocket cover brackets.

5. Loosen collars next to bearings on paper sprocket shaft and slide shaft out of bearings to remove.

6. Reverse procedure to reassemble.

5.3.6 *PHOTOCELL/HOME POSITION ALIGNMENT*

(a) Alignment Check

1. With the photo actuator pin engaged within the LED/photocell package there should be a clearance of .110" (.279 cm) ±.015" (.038 cm) from the tip of the actuator pin to the inside edge of the photocell package (Figure 5-7).

2. With the pen carrier in the home position, the photo actuator pin should be inside the LED/photocell package.

(b) Alignment

1. Turn power off.

2. Position the actuator pin so that it is inside the photocell package. Loosen the two locking screws holding the photocell package bracket and move the bracket for a clearance of .110" $\pm$.015" (.279 cm $\pm$ .038 cm) from the tip of the actuator pin to the inside edge of the photocell package.

3. Move carriage away from left margin.

4. Remove timing belt from the carriage drum pulley.

5. Move the carriage back toward the left margin until the pen axis actuator actuates the right limit switch.

6. Rotate the pen axis flag until it is 90° from engaging the LED/photocell package (Figure 5-8).

7. Replace the timing belt onto the carriage drive pulley.

8. Turn the power on. At this time the pen carrier should go to the home position. See step (a) 2 to check alignment.

NOTE:

Due to bright lighting in some offices, the photocells may not work properly. In such cases, replace the side cover before turning power back on. This allows normal reset.

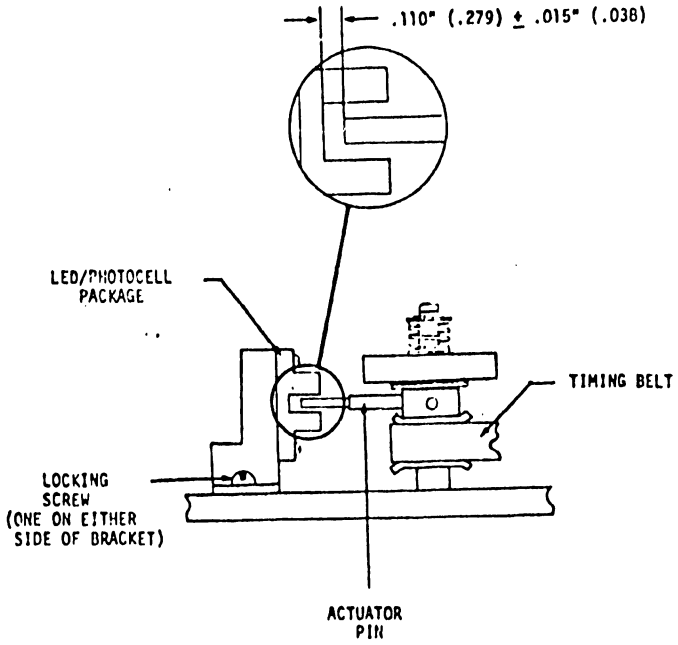

FIGURE 5-7 LED/PHOTOCELL ALIGNMENT

FIGURE 5-8 LED/PHOTOCELL HOME POSITION

5.3.7 *CARRIAGE ASSEMBLY*

(a) Adjustment Check

1. Carriage rollers do not rattle on raceways when carriage is in motion.

2. With pen carriage moved to absolute home position (distance of .75" (19 mm) between pen 1 and right paper sprocket teeth), the pointer is at "0" on the carriage arm scale (Figure 5-9A).

3. Check for only slight line separation or line wiggle in return to origin.

4. Check carriage brake for excessive wear.

(b) Adjustment

1. Turn roller adjusting screw so carriage roller touches upper race of carriage arm extrusion (Figure 5-9B).

2. Loosen pointer mounting screws on rear of carriage, move pointer to proper position and tighten screws.

3. Tighten carriage brake as required to reduce wiggle or line separation (Figure 5-9C).

NOTE:

Do not overtighten carriage brake or motor will stall.

(c) Removal and Replacement

1. Remove side covers and carriage arm (Section 5.3.9, 5.3.12).

2. Roll carriage assembly out the end of carriage arm.

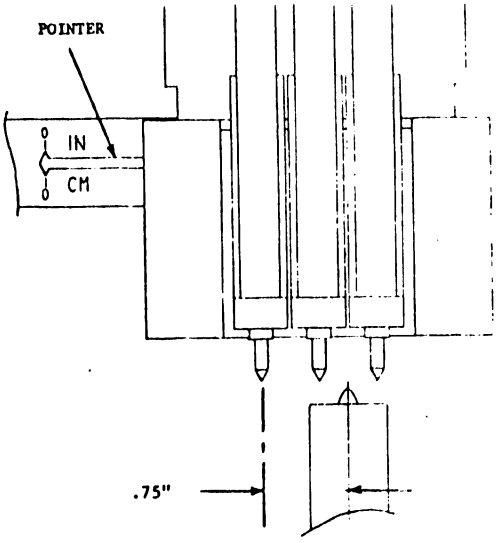

A

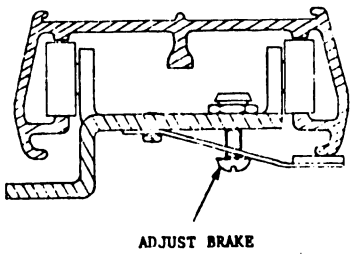

B

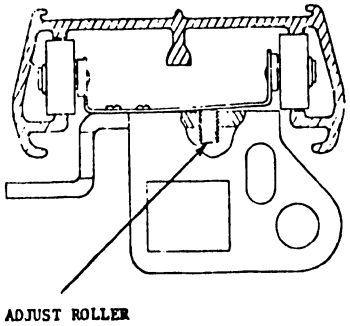

C

FIGURE 5-9 CARRIAGE ASSEMBLY ADJUSTMENTS

5.3.8 *CARRIAGE DRIVE ASSEMBLY*

(a) Adjustment Check

1. Using a spring gauge and scale, deflect the middle of the drive belt .31" or 5/16" (7.9 mm). The gauge should read 1 lb. ±2 oz. (453 gm ± 57 gm). (Figure 5-10A).

2. With the carrier assembly at the left side of the arm, using a spring scale, pull the cable away from the arm. When the cable is pulled a distance of .50" ± .10" (1.27 cm ± .25 cm) there should be a reading of 22 oz. ±2 oz. (623 gm ± 57 gm) (Figure 5-10B).

3. Pen axis flag in home position is centered in photocell assembly and tip of the flag is .110" ± .015" (.279 cm ± .038 cm) from inside edge of photocell assembly (see Figure 5-7).

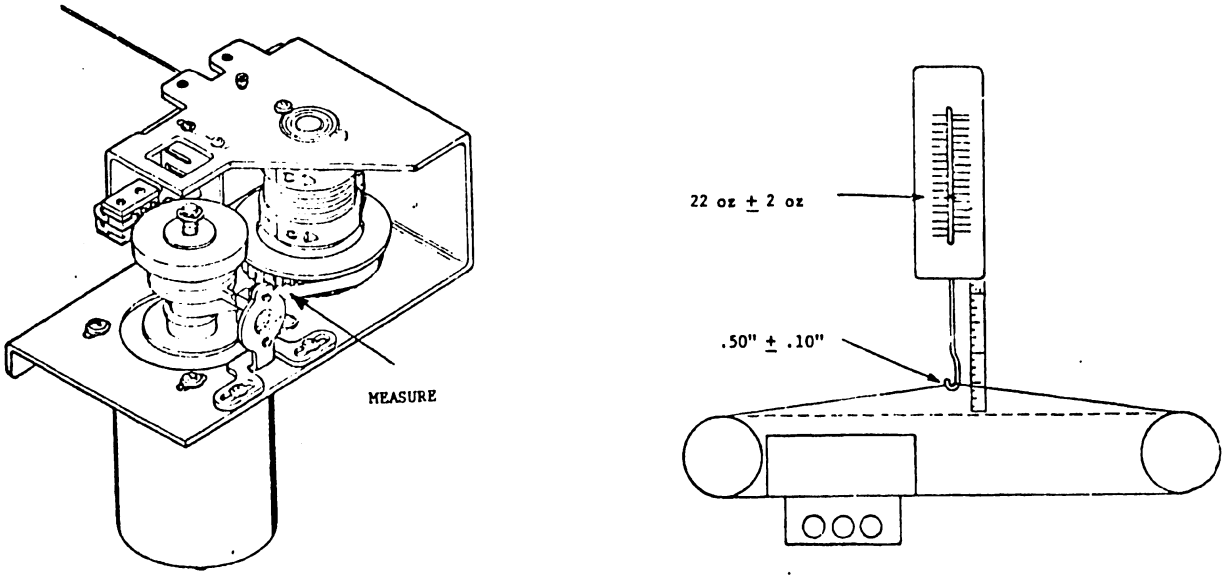

A B

FIGURE 5-10 CARRIAGE DRIVE ADJUSTMENTS

(b) Adjustment

1. Loosen the screws holding the carriage drive motor to the carriage drive support bracket and move in the desired direction; retighten the screws.

2. To adjust cable tension, loosen lock nut under cable idler pulley and turn cable tension adjusting screw for proper tension, then retighten idler pulley lock nut (see Figure 5-3).

3. Loosen photocell mounting bracket screws and move bracket to the desired location.

(c) Removal and Replacement

1. Remove side covers, electrical chassis and carriage arm (Section 5.3.9, 5.3.11, 5.3.12).

2. Loosen lock nut on pen drive idler pulley and turn cable tension adjusting screw CCW to release pen drive cable tension, then disconnect cable from pen carriage.

3. Unplug pen drive motor from electrical chassis.

4. Remove screws holding carriage arm mounting bracket to left side plate.

5. Remove 'C' clip from top of pen drive motor shaft and remove spring and flywheel. Then remove drive motor mounting screws.

6. Remove carriage drum top bearing retaining screws.

7. Loosen Allen screw in carriage drum shaft retaining collar and slide drum up and out of bottom bearing.

8. Remove carriage drive support bracket mounting screws.

9. Reverse procedure to reassemble.

5.3.9 *CARRIAGE ARM ASSEMBLY*

(a) Adjustment Check

1. Pen carriage uniform .43" ± .03" (11 cm ± .8 cm) above paper guide surface across the 16" (406.4 mm) plotting axis (Figure 5-11A).

2. Plot axis must be perpendicular and straight within .005" (.13 mm) in 5" (127 mm) and .010" (.25 mm) in 16" (406 mm) of plotting (see paper sprocket adjustment, Section 5.3.5).

(b) Adjustment

1. Loosen carriage arm mounting bracket and carriage drive support bracket and move in appropriate direction to adjust height and perpendicularity of plot (Figure 5-11C).

(c) Removal and Replacement

1. Remove side covers and electrical chassis (Section 5.3.11, 5.3.12).

2. Unplug carriage wiring harness from socket on side plate.

3. Loosen Allen screw in collar on carriage guide rod and remove guide rod.

4. Remove screws mounting carriage arm to carriage arm mounting bracket and carriage drive support bracket.

5. Loosen lock nut on pen drive idler pulley, turn cable tension adjusting screw CCW to release pen drive cable tension and disconnect cable from pen carriage.

6. Reverse procedure to reassemble.

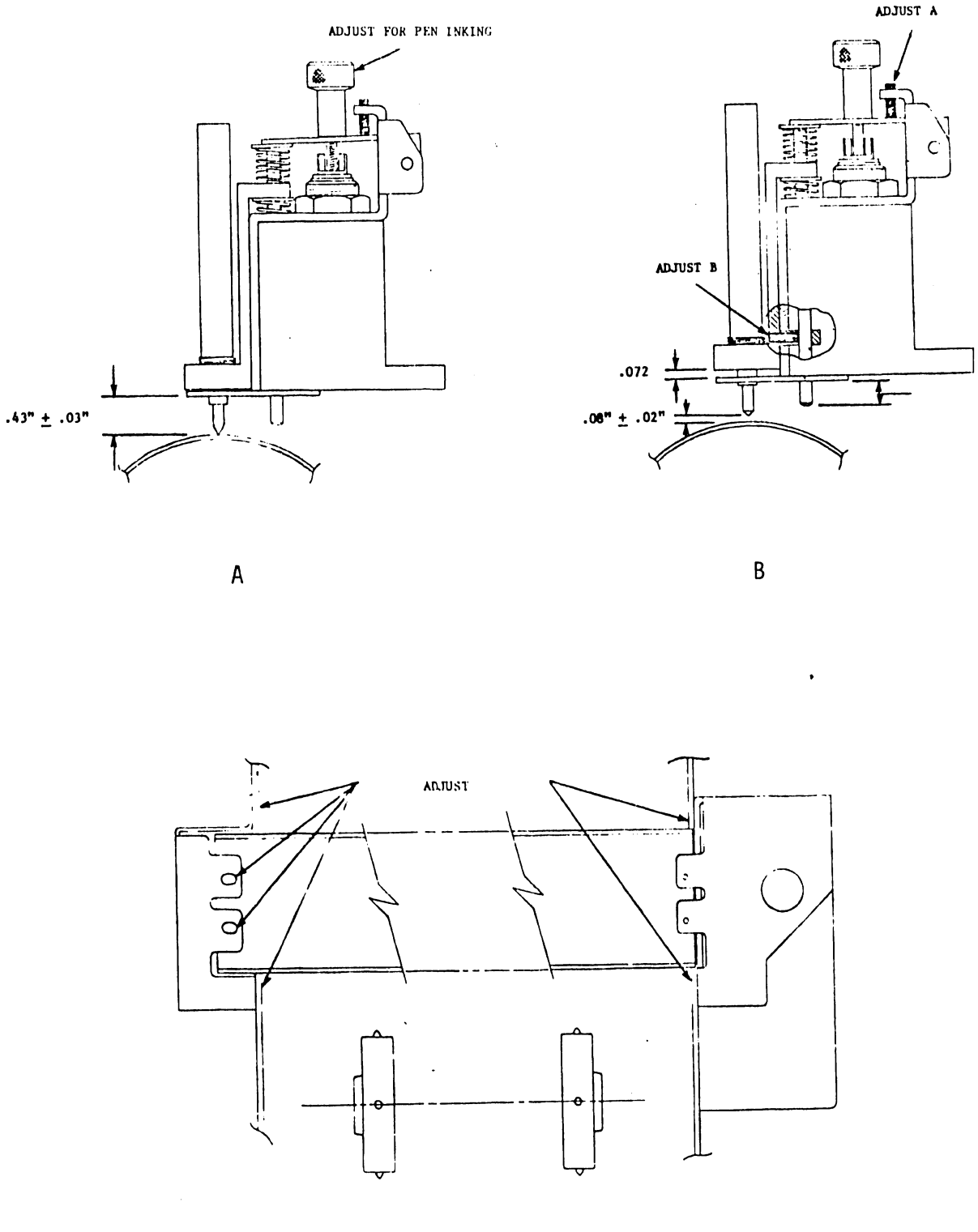

FIGURE 5-11 PEN CARRIAGE ADJUSTMENTS

5.3.10 *PEN/SOLENOID ASSEMBLY*

(a) Adjustment Check (each pen/solenoid)

1. Pen centered on guide pins and solenoid adjustment screw (Figure 5-12).

2. With solenoid deenergized (pen up) solenoid guide pin should extend .25" (.63 cm) below the pen guide plate (Figure 5-11B).

3. With solenoid deenergized, the bottom of the pen holder should be .072" (.18 cm) above the top surface of the pen guide plate (Figure 5-11B).

4. With solenoid deenergized, pen point should be .06" $\pm$ .02" (.15 cm $\pm$ .05 cm) above the surface of the paper guide (Figure 5-11B).

5. With solenoid energized, the top surface of the pen guide plate should be .43" $\pm$ .03" (1.1 cm $\pm$ .08 cm) above the paper guide across the 16" (40.64 cm) plotting axis (see Figure 5-11A).

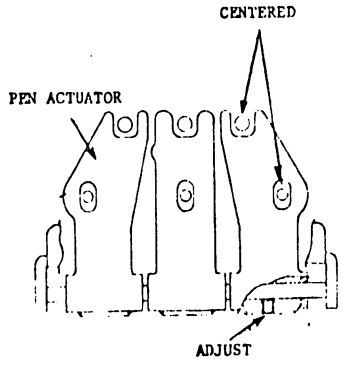

FIGURE 5-12 PEN ACTUATOR ADJUSTMENT

(b) Adjustment

1. Solenoid

   a. Loosen set screw in actuating bracket collar and move in appropriate direction (a-1).

   b. With solenoid deenergized (pen up), adjust return position pen height adjusting screw for proper guide pin extension (a-2).

   c. With solenoid deenergized (pen up), loosen set screw in base of pen holder and adjust pen holder for proper gap (a-3).

   d. Turn adjustment knob CW to lower pen guide plate for proper gap (a-5).

2. Pen

   a. Turn pen case clockwise to lower pen point. Turn pen case counterclockwise to raise pen point (a-4).

(c) Removal and Replacement

1. Remove side covers and carriage arm (Section 5.3.9, 5.3.12).

2. Invert arm and remove pen mount carriage mounting screws.

3. Remove actuator support bracket mounting screws.

4. Reverse procedure to reassemble.

5.3.11 *ELECTRICAL CHASSIS REMOVAL/REPLACEMENT*

1. Remove eight four front and four rear electrical chassis mounting screws from the base casting.

2. Lift the plotter off the electrical chassis.

3. Reverse procedure to reassemble.

5.3.12 *SIDE COVER REMOVAL/REPLACEMENT*

1. Loosen the Allen screws (front and rear) at the bottom of the side casting.

2. Remove three screws from top of side plate holding side casting.

3. Slide side casting off guide pins.

4. Reverse procedure to reassemble.

SECTION 6 MAIN-TENANCE

SECTION 6
MAINTENANCE

6.1 INTRODUCTION

This section of the manual consists of three sections: diagnostics, preventive maintenance and troubleshooting.

The diagnostics section contains a description, operating procedure and a sample diagnostic program to be run on the Model 2272 Plotters by the companion Model 2200 computer. The diagnostic program is written to aid the user in checking the plotter and to assure sustained plotting quality.

The preventive maintenance section will amplify Section 5 (Adjustments, Removal and Replacement) by directing the user to the more frequent problems solved by inspection (visual checks) such as cleaning, wear, adjustments and lubrication.

Troubleshooting tables are available to aid in finding the cause and the solution to operating problems. The tables commence with the most common and basic faults and progress to the less frequent and more complex faults.

6.2 DIAGNOSTIC

The Model 2272 plotter uses a tape diagnostic program. To run the plotter diagnostic it is necessary to reset home position to the left side of the carriage assembly.

6.2.1 *DIAGNOSTIC HOME POSITION SETUP*

1. Depress Slew Mode switch.
2. Depress the Left Arrow switch (←) and move pen assembly until the pen comes within one inch of the paper sprocket holes.

3. Depress Set Limit Mode switch.
4. Press Home switch once. (This resets the programmed home position to the current location of the pen carriage.)
5. Depress Plot Mode switch.

6.2.2 *OUTPUT SYSTEM DIAGNOSTIC*

1. Insert Output System Diagnostic cassette in tape drive.
2. Rewind cassette, key CLEAR, EXECUTE, LOAD, EXECUTE, RUN, EXECUTE and follow instructions listed below along with those listed on the CRT.
3. Key S.F. key for 2212 diagnostic (as listed on CRT).
4. Key in dimensions (listed on CRT).
5. Key EXECUTE.

6.2.3 *2272 DIAGNOSTIC*

(INFORMATION TO FOLLOW)

6.3 PREVENTIVE MAINTENANCE

6.3.1 *VISUAL CHECKS (QUARTERLY)*

1. Check for loose components, screws or bolts.
2. Check perpendicularity of X and Y axis.
3. Check belts and carriage brake for wear.
4. Check cable tension of carriage drive cable.
5. Run diagnostic.

6.3.2 *ADJUSTMENTS*

Any adjustments required are covered in Section 5.

6.4 TROUBLESHOOTING

(INFORMATION TO FOLLOW)

SECTION 7 ELECTRICAL SCHEMATICS

THE SCHEMATICS, WHEN AVAILABLE, ARE ON THE LAST FICHE IN THIS SET.

SECTION 8

MECHANICAL ASSEMBLY DRAWINGS

SECTION 8

MECHANICAL ASSEMBLY DRAWINGS

8.1 INTRODUCTION

Section 8 lists the bill of materials for the Model 53/53M Drum Plotter in lieu of the mechanical assembly drawings. A set of assembly drawings will follow when they become available.

ASSEMBLY PART NUMBER 177 2212 W3
ASSEMBLY DESCRIPTION 2272 DRUM PLOTTER (3 PEN)

LEGEND
*=KIT TAG #=STATUS ITEM ###=FRACTIONAL QTY

PART NUMBER		DESCRIPTION		QUANTITY	
000 0005		LABOR PRODUCTION SYSTEMS		11.00	
000 0011		LABOR QUALITY CONTROL		2.20	###
210 7070 A	#	7070-A MODULE		1.00	
209 7070	#	7070 W/UNLOADED SOCKETS		1.00	
C00 0001		LABOR SUB-SYSTEMS		1.10	###
000 0011		LABOR QUALITY CONTROL		.22	###
300 1900		.05 UF 12V +80-20% CERAMIC CAP	RF2176	13.00	
300 4000		1 UF 35V 10% TANT CAPACITOR (A)	RF2106	1.00	
300 4017		5.6 UF 35V 10% TANT CAPACITOR (B)	RF2106	1.00	
300 4022		15 UF 20V 10% TANT CAPACITOR (B)		4.00	
321 0008		10 MC .05% BLILEY BXW OSCILLATOR		1.00	
330 1010		10 OHM 1/4 W 10% .4 RESISTOR		2.00	
330 2018		180 OHM 1/4 W 10% .4 RESISTOR		1.00	
330 2022		220 OHM 1/4 W 10% .4 RESISTOR		2.00	
330 3018		1.8K OHM 1/4 W 10% .4 RESISTOR		1.00	
330 3047		4.7K OHM 1/4 W 10% .4 RESISTOR	RF2176	12.00	
330 4010		10K OHM 1/4 W 10% .4 RESISTOR	PCBFNL	7.00	
330 4047		47K OHM 1/4 W 10% .4 RESISTOR	PCBFNL	1.00	
375 1050		TRANSISTOR SPS6551		2.00	
376 0002		7400N INTEGRATED CIRCUIT	RF2176	1.00	
376 0003		7410N INTEGRATED CIRCUIT		1.00	
376 0004		7420N INTEGRATED CIRCUIT		1.00	
376 0006		7474N INTEGRATED CIRCUIT	RF2176	1.00	
376 0008		7442N INTEGRATED CIRCUIT		2.00	
376 0010		7404N INTEGRATED CIRCUIT	RF2106	7.00	
376 0016		7402 INTEGRATED CIRCUIT		1.00	
376 0073		7490 INTEGRATED CIRCUIT		1.00	
376 0081		7408 INTEGRATED CIRCUIT		1.00	
376 C093		7432 INTEGRATED CIRCUIT	RF2176	1.00	
376 0094		74161/9316 INTEGRATED CIRCUIT	RF2176	4.00	
376 C098		74174 INTEGRATED CIRCUIT		1.00	
376 0104		9602 INTEGRATED CIRCUIT	RF2106	1.00	
376 0158		74LS155 I.C.		1.00	
376 0178		75322 I.C.		1.00	
376 0193		74LS368 I.C.		4.00	
376 9008		IC PAD 16 PIN TEKNA #4330	PCBFNL	1.00	
376 9011		40 PIN IC SOCKET BURNDY # DILBZ40P1	PCBFNL	1.00	
376 9012		14 PIN IC SOCKET CAMBION		1.00	
380 1001 48		D035 SIL DIODE 30V, 100MA AT 1V .4B		1.00	
510 7070	#	7070 PRINTED CIRCUIT BOARD		1.00	
605 0117	*	P.V.C. TUBING 3/8ID CLEAR	PCBFNL	.05	###
377 0269		8080A MICROPROCESSOR		1.00	

ASSEMBLY PART NUMBER 177 2212 W3
ASSEMBLY DESCRIPTION 2272 DRUM PLOTTER (3 PEN)

LEGEND
*=KIT TAG #=STATUS ITEM ###=FRACTIONAL QTY

PART NUMBER	DESCRIPTION		QUANTITY	
210 7071 A	# 7071-A MODULE		1.00	
209 7071	# 7071 W/UNLOADED SOCKETS		1.00	
000 0001	LABOR SUB-SYSTEMS		.80	###
000 0011	LABOR QUALITY CONTROL		.16	###
300 1900	.05 UF 12V +80-20% CERAMIC CAP	RF2109	3.00	
300 1930	.1 UF 50V +80-20% CERAMIC CAP(HIFRQ	RF2109	8.00	
300 4018	18 UF 15V 10% TANT CAPACITOR (B)	RF2109	3.00	
300 4025	5.6 UF 35V 5% TANT CAPACITOR (B)	RF2109	1.00	
376 0008	7442N INTEGRATED CIRCUIT		1.00	
376 0010	7404N INTEGRATED CIRCUIT	RF2109	3.00	
376 0193	74LS368 I.C.	RF2109	3.00	
376 9003	24 PIN IC SOCKET BURNDY		4.00	
377 0069	2102A-4 / 2102-1 / 91028 RAM	RF2109	8.00	
510 7071	# 7071 PRINTED CIRCUIT BOARD		1.00	
377 0317	# 2708 INTEL PROM		4.00	
210 7072	# 7072 MODULE		1.00	
000 0001	LABOR SUB-SYSTEMS		.55	###
000 0011	LABOR QUALITY CONTROL		.11	###
300 1900	.05 UF 12V +80-20% CERAMIC CAP		3.00	
300 4022	15 UF 20V 10% TANT CAPACITOR (B)	RF2105	2.00	
330 3010	1K OHM 1/4 W 10% .4 RESISTOR	EC5580	3.00	
350 0009	225-21521-10500 PC CONN SOLDER TYPE	RF2105	1.00	
376 0006	7474N INTEGRATED CIRCUIT		1.00	
376 0010	7404N INTEGRATED CIRCUIT		2.00	
376 0139	7414 I.C.		1.00	
376 0183	74173 I.C.		2.00	
376 0193	74LS368 I.C.		1.00	
510 7072	# 7072 PRINTED CIRCUIT BOARD		1.00	
210 7073	# 7073 MODULE		1.00	
000 0001	LABOR SUB-SYSTEMS		2.75	###
000 0011	LABOR QUALITY CONTROL		.55	###
300 1470	470 PF 10% CERAMIC CAPACITOR		2.00	
300 1900	.05 UF 12V +80-20% CERAMIC CAP		9.00	
300 1901	.1 UF 10V +-20% CERAMIC CAPACITOR		1.00	
300 1906	.001 UF 200V 10% CERAMIC CAPACITOR		2.00	
300 4022	15 UF 20V 10% TANT CAPACITOR (B)		2.00	
330 1047	47 OHM 1/4 W 10% .4 RESISTOR		1.00	
330 2010	100 OHM 1/4 W 10% .4 RESISTOR		1.00	
330 2027	270 OHM 1/4 W 10% .4 RESISTOR		8.00	
330 2039	390 OHM 1/4 W 10% .4 RESISTOR		2.00	
330 2068	680 OHM 1/4 W 10% .4 RESISTOR		1.00	
330 3010	1K OHM 1/4 W 10% .4 RESISTOR	RF2107	1.00	

ASSEMBLY PART NUMBER 177 2212 W3
ASSEMBLY DESCRIPTION 2272 DRUM PLOTTER (3 PEN)

LEGEND
*=KIT TAG #=STATUS ITEM ###=FRACTIONAL QTY

PART NUMBER	DESCRIPTION		QUANTITY	
330 3012	1.2K OHM 1/4 W 10% .4 RESISTOR		3.00	
330 3015	1.5K OHM 1/4 W 10% .4 RESISTOR		1.00	
330 3022	2.2K OHM 1/4 W 10% .4 RESISTOR		2.00	
330 3027	2.7K OHM 1/4 W 10% .4 RESISTOR	RF2107	3.00	
330 3033	3.3K OHM 1/4 W 10% .4 RESISTOR		1.00	
330 3047	4.7K OHM 1/4 W 10% .4 RESISTOR	EC5628	29.00	
330 4010	10K OHM 1/4 W 10% .4 RESISTOR	RF2107	3.00	
330 4033	33K OHM 1/4 W 10% .4 RESISTOR		1.00	
332 1027	27 OHM 1 W 10% RESISTOR		8.00	
336 1014	1K TRIMPOT 90 DEG MOUNT BECKMAN#72X		2.00	
374 0002	REGULATOR -5V 1/2A FAIR#79M05AUC	EC5613	1.00	
375 1017	TO-18 SIL PNP (RE GT544) C5300-1038	EC5644	8.00	
375 1027	2N3725 TRANSISTOR	RF2107	5.00	
375 1034	2N6111 PNP PLASTIC POWER TRANSISTOR		3.00	
375 1051	TRANSISTOR 2N6292 (PLASTIC)		9.00	
375 1052	TRANSISTOR 2N6387 (PLASTIC)		1.00	
375 1053	TRANSISTOR RCA8203A (PLASTIC)		2.00	
375 9001	TRANSIPAD 8977887-1 (LARGE	PCBFNL	5.00	
375 9004	TRANSIPAD TO-18 (SMALL)		8.00	
375 9016	MICA INSUL#DF103A FOR 375-1034/1035	PCBFNL	16.00	
376 0008	7442N INTEGRATED CIRCUIT		2.00	
376 0010	7404N INTEGRATED CIRCUIT		2.00	
376 0053	74193 INTEGRATED CIRCUIT		2.00	
376 0066	723 INTEGRATED CIRCUIT		2.00	
376 0093	7432 INTEGRATED CIRCUIT		1.00	
376 0098	74174 INTEGRATED CIRCUIT	RF2107	1.00	
376 0104	9602 INTEGRATED CIRCUIT		1.00	
376 0193	74LS368 I.C.		3.00	
376 0194	7411 I.C.	RF2107	4.00	
380 3004	GE A-15F RECTIFIER		2.00	
380 4000	EM403 / 1N4004 RECTIFIER	RF2107	19.00	
458 0320	SPRING STOP(FS-3)B6640-107	PCBFNL	1.00	
458 0321	COUNTERWEIGHT ARM(FS-3)C6640-109	PCBFNL	1.00	
462 0270	SPACER,#6 FIBRE 9/16 LG HH SM8893	PCBFNL	2.00	
510 7073	# 7073 PRINTED CIRCUIT BOARD		1.00	
650 3120	6-32 X 3/8 PAN HD PHL MS SS SEMS	PCBFNL	3.00	
650 3131	6-32 X 3/8 NYLON COVERED FIL HD SLT	PCBFNL	16.00	
650 3280	6-32 X 7/8 PAN HD PHL MS SS	PCBFNL	2.00	
653 3001	NO. 6 INT T LK WASHER	PCBFNL	2.00	
270 0330	DRUM PLOTTER CHASSIS ASSY		1.00	
000 0001	LABOR SUB-SYSTEMS		3.50	###
000 0011	LABOR QUALITY CONTROL		.70	###

ASSEMBLY PART NUMBER 177 2212 W3
ASSEMBLY DESCRIPTION 2272 DRUM PLOTTER (3 PEN)

LEGEND
*=KIT TAG #=STATUS ITEM ###=FRACTIONAL QTY

PART NUMBER	DESCRIPTION		QUANTITY	
210 7074	* # 7074 MODULE(M.B.)(PRELIMINARY)		1.00	
000 0001	LABOR SUB-SYSTEMS		1.50	###
000 0011	LABOR QUALITY CONTROL		.30	###
300 3058	2000 UF 20V ELECTROLYTIC CAPACITOR		1.00	
300 3067	11K UF 50V ELECTROLYTIC CAPACITOR		1.00	
300 3069	27000 UF 30V ELECTROLYTIC CAP		1.00	
300 3073	6000 UF 25V ELECTROLYTIC CAP		1.00	
300 3077	10K UF 75V 2 X 4 1/8 ELECT CAP		1.00	
300 9003	CAP CLAMP 1 3/4 INCH 2 LUG	EC5659	1.00	
300 9009	CAP CLAMP 1 1/4 INCH 2 LUG CMC-22	EC5659	1.00	
300 9022	CAP CLAMP 2 1/16 INCH 3 LUG	EC5659	1.00	
330 2056	560 OHM 1/4 W 10% .4 RESISTOR	EC5659	1.00	
330 3047	4.7K OHM 1/4 W 10% .4 RESISTOR	EC5659	3.00	
330 4010	10K OHM 1/4 W 10% .4 RESISTOR	EC5659	15.00	
331 3047	4.7K OHM 1/2 W 10% RESISTOR	RF2101	1.00	
350 0011	225-21521-110 PC CONN SOLDER TYPE	EC5659	12.00	
350 0021	225-22221-110 SOL.TYPE W/OFF-74		1.00	
376 9016	24 PIN IC SOCKET (CAMBION)	EC5659	1.00	
376 9017	24 POS ANTI-WICKING WAFER	EC5659	1.00	
380 3004	GE A-15F RECTIFIER		10.00	
380 4000	EM403 / 1N4004 RECTIFIER		2.00	
452 2563	CLAMP,CAPACITOR 2.00 DIA B6815-21	EC5659	1.00	
510 7074	# 7074 PRINTED CIRCUIT BOARD		1.00	
600 9018	18 GA TINNED COPPER BUS WIRE	EC5659	.25	###
650 3120	6-32 X 3/8 PAN HD PHL MS SS SEMS	EC5659	9.00	
650 3160	6-32 X 1/2 PAN HD PHL MS SS SEMS	EC5659	3.00	
652 0032	6-32 LOCK-NUT KEPS 511-061800-00	EC5659	12.00	
654 1010	#10 GROUND LUG	EC5659	8.00	
654 1186	6 POS PIN HEADER AMP 1-380999-0		2.00	
654 1190	8 POS PIN HEADER AMP 350212-1	EC5659	1.00	
220 1090	P045 WIRE & LUG ASSY(12W)D6482-12		1.00	
000 0001	LABOR SUB-SYSTEMS		.01	###
600 0000	WIRE 18 GA BLACK UL		.33	###
654 1163 R	SOCKET 20-14 GA(REEL)AMP 61117-4		1.00	
220 1091	P046 WIRE & LUG ASSY(12W)D6482-12		1.00	
000 0001	LABOR SUB-SYSTEMS		.01	###
600 0009	WIRE 18 GA WHITE UL		.33	###
654 1163 R	SOCKET 20-14 GA(REEL)AMP 61117-4		1.00	
220 1092	P047 WIRE & LUG ASSY(12W)D6482-12		1.00	
000 0001	LABOR SUB-SYSTEMS		.01	###
600 0054	WIRE 18 GA GREEN/YELLOW UL		.41	###
654 0063 R	#8 RING LUG RED BA16-8M (2K/REEL)		1.00	

ASSEMBLY PART NUMBER 177 2212 W3
ASSEMBLY DESCRIPTION 2272 DRUM PLOTTER (3 PEN)

LEGEND
*=KIT TAG #=STATUS ITEM ###=FRACTIONAL QTY

PART NUMBER		DESCRIPTION	QUANTITY	
654 1163 R		SOCKET 20-14 GA(REEL)AMP 61117-4	1.00	
279 1013		SUB CHASSIS/BASE ASSY(12W)	1.00	
000 0011		LABOR QUALITY CONTROL	.04	###
000 0020		LABOR PREP AREA	.20	###
451 1102	#	CHASSIS WELDMT(53)PLOTTER C6630-521	1.00	
651 0424		RIVET AVDEL DOMEHEAD 11250617	4.00	
655 0203		FEET BLACK GREENE BH 2096	4.00	
325 2112		SLIDE SW.115/230 VAC	1.00	
334 0010		25 OHM 25 WATT FIXED RESISTOR	4.00	
400 1007		FAN,HOWARD 3-90-8177	1.00	
410 0104	#	MMC 5735 TRANSFORMER(-12W)C5068-106 EC5659	1.00	
451 4442		BRKT,FAN(53)C6630-211	1.00	
451 4443		BRKT,HEATSINK SUPPT(53)B6630-515	2.00	
451 4444		BRKT,SLIDE SWITCH(53)C6630-524	1.00	
510 6749	#	6749 PRINTED CIRCUIT BOARD	1.00	
600 0000	*	WIRE 18 GA BLACK UL	3.33	###
600 9018	*	18 GA TINNED COPPER BUS WIRE	1.00	
605 0002	*	TUBING #15 CLEAR	.50	###
605 0012	*	TUBING #4 CLEAR	2.33	###
605 0123	*	SHRINK TUBING TYPE RNF 3/16 ID BLK	.25	###
605 1004	*	CABLE TYE, PAN-TY PLTIM-M	6.00	
650 2087		4-40X1/4 PAN HD PHL MS SS MAG. SEMS	8.00	
650 3120		6-32 X 3/8 PAN HD PHL MS SS SEMS	2.00	
650 4120		8-32 X 3/8 PAN HD PHL MS SS SEMS	2.00	
650 4160		8-32 X 1/2 PAN HD PHL MS SS SEMS	6.00	
650 4800		8-32 X 2 1/2 PAN HD PHL MS SS	4.00	
651 0401		RIVET POP 1/8 X 3/16	2.00	
652 3000		6-32 HEX NUT SS	1.00	
653 3003		NO. 6 SPLIT LOCK MED WASHER	1.00	
653 4000		NO. 8 FLAT WASHER	4.00	
653 6013		3/16X3/4X.032 STEEL WASHER CAD PLTE	4.00	
654 1006		#6 GROUND LUG	1.00	
654 1175		3 POS SOCKET HOUSING AMP 1-480304-0	1.00	
654 1274		CABLE CLAMP ADH.BACK DKLSP 021-0375	1.00	
654 1286		FLAT CABLE CLAMP 3M#3484-1000	3.00	
279 5050		FINAL ASSY COMMON PARTS	1.00	
000 0005		LABOR PRODUCTION SYSTEMS	2.00	
000 0011		LABOR QUALITY CONTROL	.40	###
210 7075	#	7075 MODULE(KB)	1.00	
000 0001		LABOR SUB-SYSTEMS	.80	###
000 0011		LABOR QUALITY CONTROL	.16	###
300 4022		15 UF 20V 10% TANT CAPACITOR (B)	1.00	

ASSEMBLY PART NUMBER 177 2212 W3
ASSEMBLY DESCRIPTION 2272 DRUM PLOTTER (3 PEN)

LEGEND
*=KIT TAG #=STATUS ITEM ###=FRACTIONAL QTY

PART NUMBER		DESCRIPTION		QUANTITY	
325 2228		4 POS INTLK SW(53)B6630-193		1.00	
325 2229		5 POS(3-2)INTLK SW(53)B6630-194		1.00	
325 2305		11SM1 MICRO SWITCH FOR CP-1		5.00	
330 2018		180 OHM 1/4 W 10% .4 RESISTOR	RF2108	2.00	
330 3056		5.6K OHM 1/4 W 10% .4 RESISTOR		1.00	
330 4010		10K OHM 1/4 W 10% .4 RESISTOR	RF2108	1.00	
330 4018		18K OHM 1/4 W 10% .4 RESISTOR		1.00	
370 0027		LAMP,ORANGE(LED)MV5154		1.00	
375 0017		2N3014 SILICON TRANSISTOR		1.00	
375 9004		TRANSIPAD TO-18 (SMALL)	PCBFNL	1.00	
376 9016		24 PIN IC SOCKET (CAMBION)	PCBFNL	1.00	
376 9017		24 POS ANTI-WICKING WAFER	PCBFNL	1.00	
380 1001 48		D035 SIL DIODE 30V, 100MA AT 1V .4B	RF2108	1.00	
510 7075	#	7075 PRINTED CIRCUIT BOARD		1.00	
605 0120		TEFLON TUBING #22 CLEAR 100 FT ROLL	PCBFNL	.08	###
220 0105		2221 PRINTER CABLE C6422-129		1.00	
000 0001		LABOR SUB-SYSTEMS		.41	###
000 0011		LABOR QUALITY CONTROL		.08	###
350 2067		36 POS.PLUG-26GA.STRND AMP#552470-1	EC4937	2.00	
350 4228		36 POS.SR COVER AMP#552073-1	EC4937	2.00	
420 0025		18 TWISTED PAIR 26 GAUGE	EC5402	13.00	
615 1297		LABEL PRINTER CABLE CONN A53001072	EC5402	2.00	
220 0146		DRUM PLOTTER I/O CABLE C6482-105		1.00	
000 0001		LABOR SUB-SYSTEMS		.50	###
000 0011		LABOR QUALITY CONTROL		.10	###
350 2066		36 POS CHAMP CONN(F) AMP 2-552475-1		1.00	
350 4225		STRAIN RELIEF,36 POS AMP 1-552297-1		2.00	
420 0004		36 CONDUCTOR 26 GAUGE CABLE		2.84	###
510 5223 C		5223C PRINTED CIRCUIT BOARD		1.00	
325 2228		4 POS INTLK SW(53)B6630-193		1.00	
325 2229		5 POS(3-2)INTLK SW(53)B6630-194		1.00	
325 9020		3300 PUSH BUTTON WHITE J52309		5.00	
325 9021		3300 PUSH BUTTON RED J52309		1.00	
325 9038		400 PUSH BUTTON CENT LAB J52309 GRY		3.00	
370 0026		LAMP,RED (LED) MV5024		1.00	
450 0102	#	COVER,SIDE LH(CAST)(2212W)E6630-500		1.00	
450 0103	#	COVER,SIDE RH(CAST)(2212W)E6630-501		1.00	
451 1221	#	BOTTOM PAN(53)D6630-517		1.00	
451 4431		BRKT WELDMT,LH FILLER(53)B6630-507		1.00	
451 4432		BRKT WELDMT,RH FILLER(53)B6630-507		1.00	
452 1051	#	BEARING PLATE(51/53)B6630-509		1.00	
452 2150		MASK,BEARING PLATE(51/53)B6630-511		1.00	

ASSEMBLY PART NUMBER 177 2212 W3
ASSEMBLY DESCRIPTION 2272 DRUM PLOTTER (3 PEN)

LEGEND
*=KIT TAG #=STATUS ITEM ###=FRACTIONAL QTY

PART NUMBER		DESCRIPTION	QUANTITY	
452 3539		SHIELD,MOTHER BD(53)B6630-525	1.00	
462 0020		CA SPACER KB 4-40 TAP A5316-M21	4.00	
550 0005		SM WHT KEY STEM	5.00	
550 0006	5	SM GRN KEY CAP	5.00	
550 0013		KEY RETAINER B5900-32	5.00	
550 3246		INSERT,HOME (53)	1.00	
550 3247		INSERT,ARROW (53)	4.00	
650 2087		4-40X1/4 PAN HD PHL MS SS MAG. SEMS	8.00	
650 3120		6-32 X 3/8 PAN HD PHL MS SS SEMS	2.00	
650 4120		8-32 X 3/8 PAN HD PHL MS SS SEMS	7.00	
650 4169		8-32 X 1/2 TRUSS HD PHIL PARK SCREW	14.00	
650 6081		10-32X1/4 FL HD PHL MS SS	2.00	
651 1005		STUD SELF-CLINCH PEM FHS-440-6	4.00	
651 1012		4-40 PEM STUD FH 440-3C	2.00	
651 1037		PEM STUD 2-56 X 1/4 TFHS-256-4	2.00	
652 0990		2-56 HEX NUT SS	2.00	
652 2000		4-40 HEX NUT SS	2.00	
653 0990		NO. 2 INT T LK WASHER	2.00	
653 2000		NO. 4 FLAT WASHER	6.00	
653 3000		NO. 6 FLAT WASHER	2.00	
653 4000		NO. 8 FLAT WASHER	7.00	
279 5050 19		Y DRIVE & ARM ASSY(INCH)6630-19	1.00	
000 0005		LABOR PRODUCTION SYSTEMS	12.00	
000 0011		LABOR QUALITY CONTROL	2.40	###
220 0147		HEAD CABLE ASSY(12W)C6482-106	1.00	
	000 0001	LABOR SUB-SYSTEMS	1.00	
	000 0011	LABOR QUALITY CONTROL	.20	###
	420 1018	COILED CORD 4 COND ALPHA 652	.50	###
	600 2000	WIRE 24 GA BLACK UL	2.08	###
	600 2003	WIRE 24 GA ORANGE UL	1.75	###
	600 2006	WIRE 24 GA BLUE UL	1.75	###
	605 1004	CABLE TYE, PAN-TY PLTIM-M	5.00	
	654 1165	R SOCKET 30-22 GA(REEL)AMP 3500078-4	7.00	
	654 1166	R PIN TERM 30-22 GA(REEL)AMP3500079-4	6.00	
	654 1189	8 POS SOCKET HSNG AMP 1-480283-0	1.00	
220 3017		KEYBOARD FLAT CABLE(12W)C6482-107	1.00	
	350 0403	24 PIN FLAT CABLE PLUG	2.00	
	420 0050	24 COND FLAT CABLE 3M 3365/24	2.50	###
279 5050 16		CARRIER ASSY CARRIAGE B6630-16	1.00	
	458 0354	CARRIER,CARRIAGE(53)C6630-119	1.00	
	461 3256	STUD,VERT.BRG.FIXED(53)B6630-174	2.00	
279 5050 17		BRKT ASSY ROLLER SPRING B6630-17	1.00	

ASSEMBLY PART NUMBER 177 2212 W3
ASSEMBLY DESCRIPTION 2272 DRUM PLOTTER (3 PEN)

LEGEND
*=KIT TAG #=STATUS ITEM ###=FRACTIONAL QTY

PART NUMBER	DESCRIPTION	QUANTITY	
451 4422	BRKT,ROLLER SPRING(53)C6630-128	1.00	
461 3254	STUD,VERT.BEARING(53)B6630-147	2.00	
279 5050 18	MOTOR ASSY X-Y DRIVE C6630-18	1.00	
000 0005	LABOR PRODUCTION SYSTEMS	2.00	
000 0011	LABOR QUALITY CONTROL	.40	###
400 0005	# STEPPING MOTOR SUPERIOR HS 25	1.00	
465 0216	TD23 BEARING (RULON) TARBELL#0406-2	1.00	
465 0942	SPRING, MARG RACK RETURN B5776-365	1.00	
465 1110	732 FLYWHEEL B6403-198	1.00	
478 0309	PULLEY,X & Y DRIVE MOTOR C6630-196	1.00	
605 1004	CABLE TYE, PAN-TY PLTIM-M	4.00	
651 1534	ROLL PIN .078 X .81 STEEL	1.00	
651 1734	GRIP RING TRUARC 5555-18	1.00	
653 6018	3/16 ID X 3/4 OD X 1/16 STL.WASHER	1.00	
654 1163 R	SOCKET 20-14 GA(REEL)AMP 61117-4	6.00	
654 1185	6 POS SOC HOUSING AMP 1-480270-0	1.00	
656 0006	732 ANNULUS CORK (RING) B6403-187	1.00	
325 2307	BURGESS V4T7 MICRO SWITCH	4.00	
325 2416	REED SWITCH,HAMLIN 5804	1.00	
325 9049	ACTUATOR,MICROSWITCH JS-224	4.00	
375 2103	H1381 (GE) PHOTO TRANSISTOR	1.00	
449 0142	ROLLER,CARRIAGE(53)(MOLD)B6636-182	4.00	
451 4425	BRKT,MICRO SW(DRIVE)(53)C6630-111	1.00	
451 4427	BRKT,Y ARM MTG(53)C6630-159	1.00	
451 4428	BRKT,MICRO SW(IDLER)(53)C6630-135	1.00	
451 4438	BRKT,SUPPORT(Y DRIVE)(53)D6630-107	1.00	
451 4440	BRKT,REED SWITCH(53)C6630-200	1.00	
451 4441	BRKT,PHOTOCELL(53)C6630-203	1.00	
452 0053	PLATE,REED SWITCH MAG(53)B6630-199	1.00	
461 0104	NUT PLATE,REED SWITCH(62)B6636-157	1.00	
461 0105	STRIP,Y ARM LAMINATE(53)B6630-523	1.00	
461 1542	RAIL,EXTRUSION GUIDE(53)B6630-113	1.00	
461 3251	ROD,GUIDE(53)B6630-112	1.00	
461 3255	STUD,CABLE PULLEY(53)B6630-148	1.00	
461 3257	STUD,GUIDE BAR BRG(53)B6630-121	2.00	
461 3258	STUD,ECCENTRIC(53)B6630-120	2.00	
461 3259	SHAFT,Y DRIVE (53)B6630-122	1.00	
465 0008	BALL BEARING,KUBAR#SR6HH ABEC-3	2.00	
465 0009	BALL BEARING,KUBAR#SR4HH ABEC-3	5.00	
465 0418	COLLAR,Y SHAFT(53)B6630-110	1.00	
465 0708	BUSHNG,NYLINER TYPE 7 #5L2FF	1.00	
465 1614	SPRING,LEE 016A-0	1.00	

ASSEMBLY PART NUMBER 177 2212 W3
ASSEMBLY DESCRIPTION 2272 DRUM PLOTTER (3 PEN)

LEGEND
*=KIT TAG #=STATUS ITEM ###=FRACTIONAL QTY

PART NUMBER	DESCRIPTION	QUANTITY
478 0200	732 PULLEY,CABLE B6403-144	1.00
478 0206	732 DRUM,CONNECTR"Y"DRIVE D6403-185	1.00
478 0308	Y ARM (53)C6630-182	1.00
478 0319	PULLEY,Y TIMING(53)(INCH)C6630-213	1.00
600 9100	732 WIRE CABLE .037 DIA.BWR#120-17	10.00
605 1004	CABLE TYE, PAN-TY PLTIM-M	5.00
650 0240	INACT.2-56 X 3/4 PAN HD MS SS	4.00
650 1060	3-48 X 3/16 PAN HD PHL MS SS SEMS	2.00
650 1080	3-48 X 1/4 PAN HD MS SS	2.00
650 1081	3-48 X 1/4 FILL HD MS BK OX	1.00
650 2168	4-40 X 1/2 SOC HD CAP (BLACK)	2.00
650 3060	6-32 X 3/16 ALLEN HD SET SCREW SS	2.00
650 3080	6-32 X 1/4 PAN HD PHL MS SS SEMS	1.00
650 3092	6-32 X 1/4 FLAT HD 100 DEG CS MS SS	2.00
650 3100	6-32 X 5/16 PN HD PHL MS SS	10.00
650 3120	6-32 X 3/8 PAN HD PHL MS SS SEMS	3.00
650 3166	6-32 X 1/2 SOC HD LONG LOC SS	2.00
650 4061	8-32 X 3/16 SOC SET SCREW BK OX	1.00
650 4082	8-32X1/4 FL HD PH (PARKER UNDERCUT)	2.00
650 4087	8-32 X 1/4 TRUSS HD SS	4.00
650 4101	8-32 X 5/16 PAN HD PHL DR	4.00
650 4131	8-32X3/8 SOC SET 1/2 DOG POINT BKOX	2.00
650 4205	8-32 X 5/8 SOC HD NYLOCK	4.00
650 6202	10-32X5/8 PAN HD PHL SS	4.00
650 6400	DISC 10-32 X 1 1/4 PAN HD PHL MS	1.00
651 1727	RETAINING RING,CRESC TRUARC 5103-25	9.00
652 0008	6-32 PEM NUT #CL 632-2	4.00
652 0053	1/4-28 HEX NUT 7/16 A.F.X 1/8 THICK	2.00
652 6000	10-32 HEX NUT SS	2.00
652 6005	10-32 ELASTIC STOPNUT	3.00
653 1000	NO. 3 INT T LK WASHER	2.00
653 2000	NO. 4 FLAT WASHER	2.00
653 2002	NO. 4 INT T LK WASHER	2.00
653 3000	NO. 6 FLAT WASHER	16.00
653 3001	NO. 6 INT T LK WASHER	10.00
653 4000	NO. 8 FLAT WASHER	4.00
653 4001	NO. 8 INT T LK WASHER	4.00
653 6000	NO. 10 FLAT WASHER	4.00
653 6009	1/4 INTERNAL TOOTH LOCK WASHER	2.00
654 1250	CLAMP, CABLE 1/8 INCH	2.00
656 0216	TIMING BELT 139T 40DP 1/4W BOG 139M	1.00
656 1003	OPTCR MAGNET ARNOLD I.G. SU 1612	1.00

ASSEMBLY PART NUMBER 177 2212 W3
ASSEMBLY DESCRIPTION 2272 DRUM PLOTTER (3 PEN)

LEGEND
*=KIT TAG #=STATUS ITEM ###=FRACTIONAL QTY

PART NUMBER	DESCRIPTION	QUANTITY	
660 0555	SHOE,BRAKE PAD(53)B6630-123	1.00	
279 5050 21	3 PEN & MOUNT ASSY 6630-21	1.00	
000 0005	LABOR PRODUCTION SYSTEMS	4.00	
000 0011	LABOR QUALITY CONTROL	.80	###
279 5050 12	CARRIAGE & BEARING ASSY B6630-12	1.00	
458 0342	PEN MOUNT,CARRIAGE(53)C6630-160	1.00	
465 0249	BEARING,GUIDE PIN(53) B6630-138	6.00	
279 5050 13	BRKT ASSY LH PEN ACTUATOR B6630-13	1.00	
451 4423	BRKT,LH PEN ACTUATOR(53)C6630-116	1.00	
458 0351	HANGER,SPRING(53)B6630-198	1.00	
279 5050 14	BRKT ASSY RH ACTUATOR ASSY B6630-14	1.00	
451 4424	BRKT,RH PEN ACTUATOR(53)C6630-116	1.00	
458 0351	HANGER,SPRING(53)B6630-198	1.00	
279 5050 15	BRKT ASSY MIDDLE PEN ACTR B6630-15	1.00	
451 4426	BRKT,MIDDLE PEN ACTUATR(53)C6630117	1.00	
458 0351	HANGER,SPRING(53)B6630-198	1.00	
320 1013 M	SOLENOID,PEN ACTUATING(53)B6630-212	3.00	
451 4439	BRKT,ACTUATOR SUPPORT(53)D6630-158	1.00	
452 0050	PLATE,3 PEN GUIDE(53)C6630-118	1.00	
458 0341	RETAINER,SPRING(53)B6630-136	6.00	
458 0349	RETAINER,BALL PEN SPRG(53)B6630-186	3.00	
458 0350	HOLDER,PEN(53)C6630-134	3.00	
458 0352	CAP,BALL PEN END(53)B6630-184	3.00	
458 0353	ADAPTOR,BALL PEN BOTTM(53)B6630-185	3.00	
458 0358	CAM,PEN LH(53)B6630-188	1.00	
461 3252	PIN,GUIDE(53)B6630-145	3.00	
461 3253	SHAFT,ACTUATOR(53)B6630-143	1.00	
465 0419	COLLAR,ACTUATOR BRKT(53)B6630-197	3.00	
465 1638	SPRING,COUNTER(53)B6630-153	3.00	
465 1639	SPRING,PRELOAD(53)	3.00	
465 1640	"C"SPRING,END CAP(53)B6630-204	3.00	
465 1642	COMPRESSION SPRING(53)LC-020C-3	3.00	
655 0168	KNOB,ADJUSTMENT(53)B6630-133	3.00	
279 5050 22	X DRIVE & FRAME ASSY(INCH)6630-22	1.00	
000 0005	LABOR PRODUCTION SYSTEMS	7.00	
000 0014	LABOR QUALITY CONTROL	1.40	###
279 5050 11	SHAFT & SPROCKET ASSY B6630-11	1.00	
464 3265	SHAFT,SPROCKET(53)B6630-214	1.00	
478 0307	PULLEY,MOLDED SPROCKET(12W)6630-176	1.00	
654 1530	ROLL PIN .078 X 1.12 LG SS	1.00	
279 5050 18	MOTOR ASSY, X-Y DRIVE C6630-18	1.00	
000 0005	LABOR PRODUCTION SYSTEMS	2.00	

ASSEMBLY PART NUMBER 177 2212 W3
ASSEMBLY DESCRIPTION 2272 DRUM PLOTTER (3 PEN)

LEGEND
*=KIT TAG #=STATUS ITEM ###=FRACTIONAL QTY

PART NUMBER		DESCRIPTION	QUANTITY	
000 0011		LABOR QUALITY CONTROL	.40	###
400 0005	#	STEPPING MOTOR SUPERIOR HS 25	1.00	
465 0216		TD23 BEARING (RULON) TARBELL#0406-2	1.00	
465 0942		SPRING, MARG RACK RETURN B5776-365	1.00	
465 1110		732 FLYWHEEL B6403-198	1.00	
478 0309		PULLEY,X & Y DRIVE MOTOR C6630-196	1.00	
605 1004		CABLE TYE, PAN-TY PLTIM-M	4.00	
651 1534		ROLL PIN .078 X .81 STEEL	1.00	
651 1734		GRIP RING TRUARC 5555-18	1.00	
653 6018		3/16 ID X 3/4 OD X 1/16 STL.WASHER	1.00	
654 1163	R	SOCKET 20-14 GA(REEL)AMP 61117-4	6.00	
654 1185		6 POS SOC HOUSING AMP 1-480270-0	1.00	
656 0006		732 ANNULUS CORK (RING) B6403-187	1.00	
279 5070 40		SIDE PLATE ASSY LH B6635-40	1.00	
000 0020		LABOR PREP AREA	.01	###
452 0045		SIDE PLATE,LEFT P.F.(62)D6636-235 EC5389	1.00	
461 3198		MP-70 SPRING PIN B6615-167	1.00	
279 5070 41		SIDE PLATE ASSY RH B6635-41	1.00	
000 0020		LABOR PREP AREA	.02	###
452 0046		SIDE PLATE,RIGHT P.F.(62)D6636-235 EC5389	1.00	
461 3198		MP-70 SPRING PIN B6615-167	1.00	
325 0021		ON-OFF ROCKER SW SPDT TB201 TW-B	1.00	
360 0000		FUSE HOLDER 90 DEGREE CONTACT	1.00	
410 2001		LINE FILTER,2 AMP 2B2	1.00	
420 1000		CORD POWER 3 COND	1.00	
451 2135		COVER,PAPER GUIDE LH(53)D6630-210	1.00	
451 2136		COVER,PAPER GUIDE RH(53)D6630-210	1.00	
451 4450		BRKT,CONNECTOR(36 PIN)(53)C6630-526	1.00	
451 4451		BRKT,A.C.MOUNTING(53)C6630-527	1.00	
452 0055		PLATE,PAPER DR ADJUST(53)B6630-215	2.00	
452 0056		PLATE,LEFT SIDE(53)D6630-100	1.00	
452 0057		PLATE,RIGHT SIDE(53)D6630-218	1.00	
452 0058		PLATE,CAM SPACER(53)B6630-216	2.00	
452 4040		GUIDE,PAPER(53)D6630-201	1.00	
458 0358		CAM,PEN LH(53)B6630-188	1.00	
458 0359		CAM,PEN RH(53)B6630-188	1.00	
461 1543		BLOCK,CAM(MOLDED)(53)C6630-217	2.00	
461 3260		SHAFT,PAPER GUIDE(53)B6630-187	1.00	
461 3262		STUD,SIDE FRAME(53)B6630-208	4.00	
461 3263		STUD,CLUSTER(53)B6630-207	1.00	
465 0219		702 ROLLER BEARING TORR. J45	1.00	
465 0420		COLLAR,SPROCKET(53)C6630-189	1.00	

ASSEMBLY PART NUMBER 177 2212 W3
ASSEMBLY DESCRIPTION 2272 DRUM PLOTTER (3 PEN)

LEGEND
*=KIT TAG #=STATUS ITEM ###=FRACTIONAL QTY

PART NUMBER	DESCRIPTION	QUANTITY	
465 C721	BUSHING,FSB-375	2.00	
465 0730	BUSHING,SPROCKET(62)C6636-229	2.00	
465 1614	SPRING,LEE 016A-0	2.00	
478 0307	PULLEY,MOLDED SPROCKET(12W)6630-176	1.00	
478 0312	FRONT EXTRUSION(51-53)C6630-180	1.00	
478 0313	REAR EXTRUSION(51-53)C6630-181	1.00	
478 0318	PULLEY,X TIMING(53)(INCH)C6630-213	1.00	
478 0322	PULLEY,TIMING 175P 40T 40XL037	1.00	
600 0000	WIRE 18 GA BLACK UL	2.50	###
600 0005	WIRE 18 GA GREEN UL	2.00	
600 0009	WIRE 18 GA WHITE UL	1.25	###
605 0000	TUBING #10 CLEAR	.50	###
605 1004	CABLE TYE, PAN-TY PLTIM-M	12.00	
650 0081	2-56 X 1/4 FL HD MS SS	4.00	
650 2066	4-40 X 3/16 FLAT HD 100DEG UC SS	4.00	
650 2098	SCR 4-40 X 1/4 PAN HD PHL LONGLOK	2.00	
650 3080	6-32 X 1/4 PAN HD PHL MS SS SEMS	8.00	
650 3091	SCR,6-32 X 1/4 TRUSS HD NYLOK	4.00	
650 3120	6-32 X 3/8 PAN HD PHL MS SS SEMS	4.00	
650 3204	6-32X5/8 FL HD PHL MS PARKERIZE	4.00	
650 4061	8-32 X 3/16 SOC SET SCREW BK OX	2.00	
650 4101	8-32 X 5/16 PAN HD PHL DR	1.00	
650 4120	8-32 X 3/8 PAN HD PHL MS SS SEMS	4.00	
650 4280	8-32 X 7/8 PAN HD PHL MS SS SEMS	1.00	
650 6201	10-32X5/8 FLANGE WHIZ-LOCK MS ZINC	8.00	
650 6202	10-32X5/8 PAN HD PHL SS	4.00	
651 1724	PLATEN SNAP RING TRUARC #5555-37	1.00	
651 1750	RETAINING RING,TRUARC 5115-37	1.00	
652 3000	6-32 HEX NUT SS	4.00	
652 4001	8-32 SQUARE NUT SS	1.00	
653 3000	NO. 6 FLAT WASHER	12.00	
653 4000	NO. 8 FLAT WASHER	6.00	
653 6000	NO. 10 FLAT WASHER	4.00	
654 1106	MATE + LOCK PIN 60618-4	3.00	
654 1149	PIN HOUSING 1-480305-0	1.00	
654 1238	HEYCO STRAIN RELIEF SR5P-4	1.00	
655 0164	CAP,THUMB SCREW SIBER #83-98-904	1.00	
656 0216	TIMING BELT 139T 40DP 1/4W BDG 139M	1.00	
656 0221	TIMING BELT 120XL025	1.00	

ASSEMBLY PART NUMBER 177 2212 M3
ASSEMBLY DESCRIPTION 2272 DRUM PLOTTER(METRIC 3 PEN)

LEGEND
*=KIT TAG #=STATUS ITEM ###=FRACTIONAL QTY

PART NUMBER		DESCRIPTION		QUANTITY	
000 0005		LABOR PRODUCTION SYSTEMS		11.00	
000 0011		LABOR QUALITY CONTROL		2.20	###
210 7070 A	#	7070-A MODULE		1.00	
209 7070	#	7070 W/UNLOADED SOCKETS		1.00	
000 0001		LABOR SUB-SYSTEMS		1.10	###
000 0011		LABOR QUALITY CONTROL		.22	###
300 1900		.05 UF 12V +80-20% CERAMIC CAP	RF2176	13.00	
300 4000		1 UF 35V 10% TANT CAPACITOR (A)	RF2106	1.00	
300 4017		5.6 UF 35V 10% TANT CAPACITOR (B)	RF2106	1.00	
300 4022		15 UF 20V 10% TANT CAPACITOR (B)		4.00	
321 0008		10 MC .05% BLILEY BXW OSCILLATOR		1.00	
330 1010		10 OHM 1/4 W 10% .4 RESISTOR		2.00	
330 2018		180 OHM 1/4 W 10% .4 RESISTOR		1.00	
330 2022		220 OHM 1/4 W 10% .4 RESISTOR		2.00	
330 3018		1.8K OHM 1/4 W 10% .4 RESISTOR		1.00	
330 3047		4.7K OHM 1/4 W 10% .4 RESISTOR	RF2176	12.00	
330 4010		10K OHM 1/4 W 10% .4 RESISTOR	PCBFNL	7.00	
330 4047		47K OHM 1/4 W 10% .4 RESISTOR	PCBFNL	1.00	
375 1050		TRANSISTOR SPS6551		2.00	
376 0002		7400N INTEGRATED CIRCUIT	RF2176	1.00	
376 0003		7410N INTEGRATED CIRCUIT		1.00	
376 0004		7420N INTEGRATED CIRCUIT		1.00	
376 0006		7474N INTEGRATED CIRCUIT	RF2176	1.00	
376 0008		7442N INTEGRATED CIRCUIT		2.00	
376 0010		7404N INTEGRATED CIRCUIT	RF2106	7.00	
376 0016		7402 INTEGRATED CIRCUIT		1.00	
376 0073		7490 INTEGRATED CIRCUIT		1.00	
376 0081		7408 INTEGRATED CIRCUIT		1.00	
376 0093		7432 INTEGRATED CIRCUIT	RF2176	1.00	
376 0094		74161/9316 INTEGRATED CIRCUIT	RF2176	4.00	
376 0098		74174 INTEGRATED CIRCUIT		1.00	
376 0104		9602 INTEGRATED CIRCUIT	RF2106	1.00	
376 0158		74LS155 I.C.		1.00	
376 0178		75322 I.C.		1.00	
376 0193		74LS368 I.C.		4.00	
376 9008		IC PAD 16 PIN TEKNA #4330	PCBFNL	1.00	
376 9011		40 PIN IC SOCKET BURNDY # DILBZ40P1	PCBFNL	1.00	
376 9012		14 PIN IC SOCKET CAMBION		1.00	
380 1001 4B		D035 SIL DIODE 30V, 100MA AT 1V .4B		1.00	
510 7070	#	7070 PRINTED CIRCUIT BOARD		1.00	
605 0117	*	P.V.C. TUBING 3/8ID CLEAR	PCBFNL	.05	###
377 0269		8080A MICROPROCESSOR		1.00	

ASSEMBLY PART NUMBER 177 2212 M3
ASSEMBLY DESCRIPTION 2272 DRUM PLOTTER(METRIC 3 PEN)

LEGEND
*=KIT TAG #=STATUS ITEM ###=FRACTIONAL QTY

PART NUMBER	DESCRIPTION		QUANTITY	
210 7071 A	# 7071-A MODULE		1.00	
209 7071	# 7071 W/UNLOADED SOCKETS		1.00	
000 0001	LABOR SUB-SYSTEMS		.80	###
000 0011	LABOR QUALITY CONTROL		.16	###
300 1900	.05 UF 12V +80-20% CERAMIC CAP	RF2109	3.00	
300 1930	.1 UF 50V +80-20% CERAMIC CAP(HIFRQ	RF2109	8.00	
300 4018	18 UF 15V 10% TANT CAPACITOR (B)	RF2109	3.00	
300 4025	5.6 UF 35V 5% TANT CAPACITOR (B)	RF2109	1.00	
376 0008	7442N INTEGRATED CIRCUIT		1.00	
376 0010	7404N INTEGRATED CIRCUIT	RF2109	3.00	
376 0193	74LS368 I.C.	RF2109	3.00	
376 9003	24 PIN IC SOCKET BURNDY		4.00	
377 0069	2102A-4 / 2102-1 / 91028 RAM	RF2109	8.00	
510 7071	# 7071 PRINTED CIRCUIT BOARD		1.00	
377 0317	# 2708 INTEL PROM		4.00	
210 7072	# 7072 MODULE		1.00	
000 0001	LABOR SUB-SYSTEMS		.55	###
000 0011	LABOR QUALITY CONTROL		.11	###
300 1900	.05 UF 12V +80-20% CERAMIC CAP		3.00	
300 4022	15 UF 20V 10% TANT CAPACITOR (B)	RF2105	2.00	
330 3010	1K OHM 1/4 W 10% .4 RESISTOR	EC5580	3.00	
350 0009	225-21521-10500 PC CONN SOLDER TYPE	RF2105	1.00	
376 0006	7474N INTEGRATED CIRCUIT		1.00	
376 0010	7404N INTEGRATED CIRCUIT		2.00	
376 0139	7414 I.C.		1.00	
376 0183	74173 I.C.		2.00	
376 0193	74LS368 I.C.		1.00	
510 7072	# 7072 PRINTED CIRCUIT BOARD		1.00	
210 7073	# 7073 MODULE		1.00	
000 0001	LABOR SUB-SYSTEMS		2.75	###
000 0011	LABOR QUALITY CONTROL		.55	###
300 1470	470 PF 10% CERAMIC CAPACITOR		2.00	
300 1900	.05 UF 12V +80-20% CERAMIC CAP		9.00	
300 1901	.1 UF 10V +-20% CERAMIC CAPACITOR		1.00	
300 1906	.001 UF 200V 10% CERAMIC CAPACITOR		2.00	
300 4022	15 UF 20V 10% TANT CAPACITOR (B)		2.00	
330 1047	47 OHM 1/4 W 10% .4 RESISTOR		1.00	
330 2010	100 OHM 1/4 W 10% .4 RESISTOR		1.00	
330 2027	270 OHM 1/4 W 10% .4 RESISTOR		8.00	
330 2039	390 OHM 1/4 W 10% .4 RESISTOR		2.00	
330 2068	680 OHM 1/4 W 10% .4 RESISTOR		1.00	
330 3010	1K OHM 1/4 W 10% .4 RESISTOR	RF2107	1.00	

ASSEMBLY PART NUMBER 177 2212 M3
ASSEMBLY DESCRIPTION 2272 DRUM PLOTTER(METRIC 3 PEN)

LEGEND
*=KIT TAG #=STATUS ITEM ###=FRACTIONAL QTY

PART NUMBER	DESCRIPTION		QUANTITY	
330 3012	1.2K OHM 1/4 W 10% .4 RESISTOR		3.00	
330 3015	1.5K OHM 1/4 W 10% .4 RESISTOR		1.00	
330 3022	2.2K OHM 1/4 W 10% .4 RESISTOR		2.00	
330 3027	2.7K OHM 1/4 W 10% .4 RESISTOR	RF2107	3.00	
330 3033	3.3K OHM 1/4 W 10% .4 RESISTOR		1.00	
330 3047	4.7K OHM 1/4 W 10% .4 RESISTOR	EC5628	29.00	
330 4010	10K OHM 1/4 W 10% .4 RESISTOR	RF2107	3.00	
330 4033	33K OHM 1/4 W 10% .4 RESISTOR		1.00	
332 1027	27 OHM 1 W 10% RESISTOR		8.00	
336 1014	1K TRIMPOT 90 DEG MOUNT BECKMAN#72X		2.00	
374 0002	REGULATOR -5V 1/2A FAIR#79M05AUC	EC5613	1.00	
375 1017	TO-18 SIL PNP (RE GT544) C5300-1038	EC5644	8.00	
375 1027	2N3725 TRANSISTOR	RF2107	5.00	
375 1034	2N6111 PNP PLASTIC POWER TRANSISTOR		3.00	
375 1051	TRANSISTOR 2N6292 (PLASTIC)		9.00	
375 1052	TRANSISTOR 2N6387 (PLASTIC)		1.00	
375 1053	TRANSISTOR RCA8203A (PLASTIC)		2.00	
375 9001	TRANSIPAD 8977887-1 (LARGE	PCBFNL	5.00	
375 9004	TRANSIPAD TO-18 (SMALL)		8.00	
375 9016	MICA INSUL#DF103A FOR 375-1034/1035	PCBFNL	16.00	
376 0008	7442N INTEGRATED CIRCUIT		2.00	
376 0010	7404N INTEGRATED CIRCUIT		2.00	
376 0053	74193 INTEGRATED CIRCUIT		2.00	
376 0066	723 INTEGRATED CIRCUIT		2.00	
376 0093	7432 INTEGRATED CIRCUIT		1.00	
376 0098	74174 INTEGRATED CIRCUIT	RF2107	1.00	
376 0104	9602 INTEGRATED CIRCUIT		1.00	
376 0193	74LS368 I.C.		3.00	
376 0194	7411 I.C.	RF2107	4.00	
380 3004	GE A-15F RECTIFIER		2.00	
380 4000	FM403 / 1N4004 RECTIFIER	RF2107	19.00	
458 0320	SPRING STOP(FS-3)B6640-107	PCBFNL	1.00	
458 0321	COUNTERWEIGHT ARM(FS-3)C6640-109	PCBFNL	1.00	
462 0270	SPACER,#6 FIBRE 9/16 LG HH SM8893	PCBFNL	2.00	
510 7073	# 7073 PRINTED CIRCUIT BOARD		1.00	
650 3120	6-32 X 3/8 PAN HD PHL MS SS SEMS	PCBFNL	3.00	
650 3131	6-32 X 3/8 NYLON COVERED FIL HD SLT	PCBFNL	16.00	
650 3280	6-32 X 7/8 PAN HD PHL MS SS	PCBFNL	2.00	
653 3001	NO. 6 INT T LK WASHER	PCBFNL	2.00	
270 0330	DRUM PLOTTER CHASSIS ASSY		1.00	
000 0001	LABOR SUB-SYSTEMS		3.50	###
C00 0011	LABOR QUALITY CONTROL		.70	###

91-8

ASSEMBLY PART NUMBER 177 2212 M3
ASSEMBLY DESCRIPTION 2272 DRUM PLOTTER(METRIC 3 PEN)

LEGEND
*=KIT TAG #=STATUS ITEM ###=FRACTIONAL QTY

PART NUMBER	DESCRIPTION		QUANTITY	
210 7074	* # 7074 MODULE(M.B.)(PRELIMINARY)		1.00	
300 0001	LABOR SUB-SYSTEMS		1.50	###
000 0011	LABOR QUALITY CONTROL		.30	###
300 3058	2000 UF 20V ELECTROLYTIC CAPACITOR		1.00	
300 3067	11K UF 50V ELECTROLYTIC CAPACITOR		1.00	
300 3069	27000 UF 30V ELECTROLYTIC CAP		1.00	
300 3073	6000 UF 25V ELECTROLYTIC CAP		1.00	
300 3077	10K UF 75V 2 X 4 1/8 ELECT CAP		1.00	
300 9003	CAP CLAMP 1 3/4 INCH 2 LUG	EC5659	1.00	
300 9009	CAP CLAMP 1 1/4 INCH 2 LUG CMC-22	EC5659	1.00	
300 9022	CAP CLAMP 2 1/16 INCH 3 LUG	EC5659	1.00	
330 2056	560 OHM 1/4 W 10% .4 RESISTOR	EC5659	1.00	
330 3047	4.7K OHM 1/4 W 10% .4 RESISTOR	EC5659	3.00	
330 4010	10K OHM 1/4 W 10% .4 RESISTOR	EC5659	15.00	
331 3047	4.7K OHM 1/2 W 10% RESISTOR	RF2101	1.00	
350 0011	225-21521-110 PC CONN SOLDER TYPE	EC5659	12.00	
350 0021	225-22221-110 SOL.TYPE W/OFF-74		1.00	
376 9016	24 PIN IC SOCKET (CAMBION)	EC5659	1.00	
376 9017	24 POS ANTI-WICKING WAFER	EC5659	1.00	
380 3004	GE A-15F RECTIFIER		10.00	
380 4000	EM403 / 1N4004 RECTIFIER		2.00	
452 2563	CLAMP,CAPACITOR 2.00 DIA B6815-21	EC5659	1.00	
510 7074	# 7074 PRINTED CIRCUIT BOARD		1.00	
600 9018	18 GA TINNED COPPER BUS WIRE	EC5659	.25	###
650 3120	6-32 X 3/8 PAN HD PHL MS SS SEMS	EC5659	9.00	
650 3160	6-32 X 1/2 PAN HD PHL MS SS SEMS	EC5659	3.00	
652 0032	6-32 LOCK-NUT KEPS 511-061800-00	EC5659	12.00	
654 1010	#10 GROUND LUG	EC5659	8.00	
654 1186	6 POS PIN HEADER AMP 1-380999-0		2.00	
654 1190	8 POS PIN HEADER AMP 350212-1	EC5659	1.00	
220 1090	P045 WIRE & LUG ASSY(12W)D6482-12		1.00	
000 0001	LABOR SUB-SYSTEMS		.01	###
600 0000	WIRE 18 GA BLACK UL		.33	###
654 1163 R	SOCKET 20-14 GA(REEL)AMP 61117-4		1.00	
220 1091	P046 WIRE & LUG ASSY(12W)D6482-12		1.00	
000 0001	LABOR SUB-SYSTEMS		.01	###
600 0009	WIRE 18 GA WHITE UL		.33	###
654 1163 R	SOCKET 20-14 GA(REEL)AMP 61117-4		1.00	
220 1092	P047 WIRE & LUG ASSY(12W)D6482-12		1.00	
000 0001	LABOR SUB-SYSTEMS		.01	###
600 0054	WIRE 18 GA GREEN/YELLOW UL		.41	###
654 0063 R	#8 RING LUG RED BA16-8M (2K/REEL)		1.00	

8-17

ASSEMBLY PART NUMBER 177 2212 M3
ASSEMBLY DESCRIPTION 2272 DRUM PLOTTER(METRIC 3 PEN)

LEGEND
*=KIT TAG #=STATUS ITEM ###=FRACTIONAL QTY

	PART NUMBER		DESCRIPTION	QUANTITY	
	654 1163	R	SOCKET 20-14 GA(REEL)AMP 61117-4	1.00	
279 1013			SUB CHASSIS/BASE ASSY(12W)	1.00	
	000 0011		LABOR QUALITY CONTROL	.04	###
	000 0020		LABOR PREP AREA	.20	###
	451 1102	#	CHASSIS WELDMT(53)PLOTTER C6630-521	1.00	
	651 0424		RIVET AVDEL DOMEHEAD 11250617	4.00	
	655 0203		FEET BLACK GREENE BH 2096	4.00	
325 2112			SLIDE SW,115/230 VAC	1.00	
334 0010			25 OHM 25 WATT FIXED RESISTOR	4.00	
400 1007			FAN,HOWARD 3-90-8177	1.00	
410 0104		#	MMC 5735 TRANSFORMER(-12W)C5068-106 EC5659	1.00	
451 4442			BRKT,FAN(53)C6630-211	1.00	
451 4443			BRKT,HEATSINK SUPPT(53)B6630-515	2.00	
451 4444			BRKT,SLIDE SWITCH(53)C6630-524	1.00	
510 6749		#	6749 PRINTED CIRCUIT BOARD	1.00	
600 0000		*	WIRE 18 GA BLACK UL	3.33	###
600 9018		*	18 GA TINNED COPPER BUS WIRE	1.00	
605 0002		*	TUBING #15 CLEAR	.50	###
605 0012		*	TUBING #4 CLEAR	2.33	###
605 0123		*	SHRINK TUBING TYPE RNF 3/16 ID BLK	.25	###
605 1004		*	CABLE TYE, PAN-TY PLTIM-M	6.00	
650 2087			4-40X1/4 PAN HD PHL MS SS MAG. SEMS	8.00	
650 3120			6-32 X 3/8 PAN HD PHL MS SS SEMS	2.00	
650 4120			8-32 X 3/8 PAN HD PHL MS SS SEMS	2.00	
650 4160			8-32 X 1/2 PAN HD PHL MS SS SEMS	6.00	
650 4800			8-32 X 2 1/2 PAN HD PHL MS SS	4.00	
651 0401			RIVET POP 1/8 X 3/16	2.00	
652 3000			6-32 HEX NUT SS	1.00	
653 3003			NO. 6 SPLIT LOCK MED WASHER	1.00	
653 4000			NO. 8 FLAT WASHER	4.00	
653 6013			3/16X3/4X.032 STEEL WASHER CAD PLTE	4.00	
654 1006			#6 GROUND LUG	1.00	
654 1175			3 POS SOCKET HOUSING AMP 1-480304-0	1.00	
654 1274			CABLE CLAMP ADH.BACK DKLSP 021-0375	1.00	
654 1286			FLAT CABLE CLAMP 3M#3484-1000	3.00	
279 5050			FINAL ASSY COMMON PARTS	1.00	
000 0005			LABOR PRODUCTION SYSTEMS	2.00	
000 0011			LABOR QUALITY CONTROL	.40	###
210 7075		#	7075 MODULE(K8)	1.00	
	000 0001		LABOR SUB-SYSTEMS	.80	###
	000 0011		LABOR QUALITY CONTROL	.16	###
	300 4022		15 UF 20V 10% TANT CAPACITOR (B)	1.00	

ASSEMBLY PART NUMBER 177 2212 M3
ASSEMBLY DESCRIPTION 2272 DRUM PLOTTER(METRIC 3 PEN)

LEGEND
*=KIT TAG #=STATUS ITEM ###=FRACTIONAL QTY

PART NUMBER		DESCRIPTION		QUANTITY	
325 2228		4 POS INTLK SW(53)B6630-193		1.00	
325 2229		5 POS(3-2)INTLK SW(53)B6630-194		1.00	
325 2305		11SM1 MICRO SWITCH FOR CP-1		5.00	
330 2018		180 OHM 1/4 W 10% .4 RESISTOR	RF2108	2.00	
330 3056		5.6K OHM 1/4 W 10% .4 RESISTOR		1.00	
330 4010		10K OHM 1/4 W 10% .4 RESISTOR	RF2108	1.00	
330 4018		18K OHM 1/4 W 10% .4 RESISTOR		1.00	
370 0027		LAMP,ORANGE(LED)MV5154		1.00	
375 0017		2N3014 SILICON TRANSISTOR		1.00	
375 9004		TRANSIPAD TO-18 (SMALL)	PCBFNL	1.00	
376 9016		24 PIN IC SOCKET (CAMBION)	PCBFNL	1.00	
376 9017		24 POS ANTI-WICKING WAFER	PCBFNL	1.00	
380 1001	4B	D035 SIL DIODE 30V, 100MA AT 1V .4B	RF2108	1.00	
510 7075	#	7075 PRINTED CIRCUIT BOARD		1.00	
605 0120		TEFLON TUBING #22 CLEAR 100 FT ROLL	PCBFNL	.08	###
220 0105		2221 PRINTER CABLE C6422-129		1.00	
000 0001		LABOR SUB-SYSTEMS		.41	###
000 0011		LABOR QUALITY CONTROL		.08	###
350 2067		36 POS.PLUG-26GA.STRND AMP#552470-1	EC4937	2.00	
350 4228		36 POS.SR COVER AMP#552073-1	EC4937	2.00	
420 0025		18 TWISTED PAIR 26 GAUGE	EC5402	13.00	
615 1297		LABEL PRINTER CABLE CONN A53001072	EC5402	2.00	
220 0146		DRUM PLOTTER I/O CABLE C6482-105		1.00	
000 0001		LABOR SUB-SYSTEMS		.50	###
000 0011		LABOR QUALITY CONTROL		.10	###
350 2066		36 POS CHAMP CONN(F) AMP 2-552475-1		1.00	
350 4225		STRAIN RELIEF,36 POS AMP 1-552297-1		2.00	
420 0004		36 CONDUCTOR 26 GAUGE CABLE		2.84	###
510 5223	C	5223C PRINTED CIRCUIT BOARD		1.00	
325 2228		4 POS INTLK SW(53)B6630-193		1.00	
325 2229		5 POS(3-2)INTLK SW(53)B6630-194		1.00	
325 9020		3300 PUSH BUTTON WHITE J52309		5.00	
325 9021		3300 PUSH BUTTON RED J52309		1.00	
325 9038		400 PUSH BUTTON CENT LAB J52309 GRY		3.00	
370 0026		LAMP,RED (LED) MV5024		1.00	
450 0102	#	COVER,SIDE LH(CAST)(2212W)E6630-500		1.00	
450 0103	#	COVER,SIDE RH(CAST)(2212W)E6630-501		1.00	
451 1221	#	BOTTOM PAN(53)D6630-517		1.00	
451 4431		BRKT WELDMT,LH FILLER(53)B6630-507		1.00	
451 4432		BRKT WELDMT,RH FILLER(53)B6630-507		1.00	
452 1051	#	BEARING PLATE(51/53)B6630-509		1.00	
452 2150		MASK,BEARING PLATE(51/53)B6630-511		1.00	

ASSEMBLY PART NUMBER 177 2212 M3
ASSEMBLY DESCRIPTION 2272 DRUM PLOTTER(METRIC 3 PEN)

LEGEND
*=KIT TAG #=STATUS ITEM ###=FRACTIONAL QTY

PART NUMBER	DESCRIPTION	QUANTITY	
452 3539	SHIELD,MOTHER BD(53)B6630-525	1.00	
462 0020	CA SPACER KB 4-40 TAP A5316-M21	4.00	
550 0005	SM WHT KEY STEM	5.00	
550 0006 5	SM GRN KEY CAP	5.00	
550 0013	KEY RETAINER B5900-32	5.00	
550 3246	INSERT,HOME (53)	1.00	
550 3247	INSERT,ARROW (53)	4.00	
650 2087	4-40X1/4 PAN HD PHL MS SS MAG. SEMS	8.00	
650 3120	6-32 X 3/8 PAN HD PHL MS SS SEMS	2.00	
650 4120	8-32 X 3/8 PAN HD PHL MS SS SEMS	7.00	
650 4169	8-32 X 1/2 TRUSS HD PHIL PARK SCREW	14.00	
650 6081	10-32X1/4 FL HD PHL MS SS	2.00	
651 1005	STUD SELF-CLINCH PEM FHS-440-6	4.00	
651 1012	4-40 PEM STUD FH 440-8C	2.00	
651 1037	PEM STUD 2-56 X 1/4 TFHS-256-4	2.00	
652 0990	2-56 HEX NUT SS	2.00	
652 2000	4-40 HEX NUT SS	2.00	
653 0990	NO. 2 INT T LK WASHER	2.00	
653 2000	NO. 4 FLAT WASHER	6.00	
653 3000	NO. 6 FLAT WASHER	2.00	
653 4000	NO. 8 FLAT WASHER	7.00	
279 5050 20	Y DRIVE & ARM ASSY(METRIC)6630-20	1.00	
000 0005	LABOR PRODUCTION SYSTEMS	12.00	
000 0011	LABOR QUALITY CONTROL	2.40	###
220 0147	HEAD CABLE ASSY(12W)C6482-106	1.00	
000 0001	LABOR SUB-SYSTEMS	1.00	
000 0011	LABOR QUALITY CONTROL	.20	###
420 1018	COILED CORD 4 COND ALPHA 652	.50	###
600 2000	WIRE 24 GA BLACK UL	2.08	###
600 2003	WIRE 24 GA ORANGE UL	1.75	###
600 2006	WIRE 24 GA BLUE UL	1.75	###
605 1004	CABLE TYE, PAN-TY PLTIM-M	5.00	
654 1165 R	SOCKET 30-22 GA(REEL)AMP 3500078-4	7.00	
654 1166 R	PIN TERM 30-22 GA(REEL)AMP3500079-4	6.00	
654 1189	8 POS SOCKET HSNG AMP 1-480283-0	1.00	
220 3017	KEYBOARD FLAT CABLE(12W)C6482-107	1.00	
350 0403	24 PIN FLAT CABLE PLUG	2.00	
420 0050	24 COND FLAT CABLE 3M 3365/24	2.50	###
279 5050 16	CARRIER ASSY CARRIAGE B6630-16	1.00	
458 0354	CARRIER,CARRIAGE(53)C6630-119	1.00	
461 3256	STUD,VERT.BRG.FIXED(53)B6630-174	2.00	
279 5050 17	BRKT ASSY ROLLER SPRING B6630-17	1.00	

ASSEMBLY PART NUMBER 177 2212 M3
ASSEMBLY DESCRIPTION 2272 DRUM PLOTTER(METRIC 3 PEN)

LEGEND
*=KIT TAG #=STATUS ITEM ###=FRACTIONAL QTY

PART NUMBER		DESCRIPTION	QUANTITY	
451 4422		BRKT,ROLLER SPRING(53)C6630-128	1.00	
461 3254		STUD,VERT.BEARING(53)B6630-147	2.00	
279 5050 18		MOTOR ASSY X-Y DRIVE C6630-18	1.00	
000 0005		LABOR PRODUCTION SYSTEMS	2.00	
000 0011		LABOR QUALITY CONTROL	.40	###
400 0005	#	STEPPING MOTOR SUPERIOR HS 25	1.00	
465 0216		TD23 BEARING (RULON) TARBELL#0406-2	1.00	
465 0942		SPRING, MARG RACK RETURN B5776-365	1.00	
465 1110		732 FLYWHEEL B6403-198	1.00	
478 0309		PULLEY,X & Y DRIVE MOTOR C6630-196	1.00	
605 1004		CABLE TYE, PAN-TY PLTIM-M	4.00	
651 1534		ROLL PIN .078 X .81 STEEL	1.00	
651 1734		GRIP RING TRUARC 5555-18	1.00	
653 6018		3/16 ID X 3/4 OD X 1/16 STL.WASHER	1.00	
654 1163	R	SOCKET 20-14 GA(REEL)AMP 61117-4	6.00	
654 1185		6 POS SOC HOUSING AMP 1-480270-0	1.00	
656 0006		732 ANNULUS CORK (RING) B6403-187	1.00	
325 2307		BURGESS V4T7 MICRO SWITCH	4.00	
325 2416		REED SWITCH,HAMLIN 5804	1.00	
325 9049		ACTUATOR,MICROSWITCH JS-224	4.00	
375 2103		H1381 (GE) PHOTO TRANSISTOR	1.00	
449 0142		ROLLER,CARRIAGE(53)(MOLD)B6636-182	4.00	
451 4425		BRKT,MICRO SW(DRIVE)(53)C6630-111	1.00	
451 4427		BRKT,Y ARM MTG(53)C6630-159	1.00	
451 4428		BRKT,MICRO SW(IDLER)(53)C6630-135	1.00	
451 4438		BRKT,SUPPORT(Y DRIVE)(53)D6630-107	1.00	
451 4440		BRKT,REED SWITCH(53)C6630-200	1.00	
451 4441		BRKT,PHOTOCELL(53)C6630-203	1.00	
452 0053		PLATE,REED SWITCH MAG(53)B6630-199	1.00	
461 0104		NUT PLATE,REED SWITCH(62)B6636-157	1.00	
461 0105		STRIP,Y ARM LAMINATE(53)B6630-523	1.00	
461 1502		RAIL,EXTRUSION GUIDE(53)B6630-113	1.00	
461 3251		ROD,GUIDE(53)B6630-112	1.00	
461 3255		STUD,CABLE PULLEY(53)B6630-148	1.00	
461 3257		STUD,GUIDE BAR BRG(53)B6630-121	2.00	
461 3258		STUD,ECCENTRIC(53)B6630-120	2.00	
461 3259		SHAFT,Y DRIVE (53)B6630-122	1.00	
465 0008		BALL BEARING,KUBAR#SR6HH ABEC-3	2.00	
465 0009		BALL BEARING,KUBAR#SR4HH ABEC-3	5.00	
465 0418		COLLAR,Y SHAFT(53)B6630-110	1.00	
465 0708		BUSHNG,NYLINER TYPE 7 #5L2FF	1.00	
465 1614		SPRING,LEE 016A-0	1.00	

ASSEMBLY PART NUMBER 177 2212 M3
ASSEMBLY DESCRIPTION 2272 DRUM PLOTTER(METRIC 3 PEN)

LEGEND
*=KIT TAG #=STATUS ITEM ###=FRACTIONAL QTY

PART NUMBER	DESCRIPTION	QUANTITY
478 0200	732 PULLEY,CABLE B6403-144	1.00
478 0206	732 DRUM,CONNECTR"Y"DRIVE D6403-185	1.00
478 0308	Y ARM (53)C6630-182	1.00
478 0311	PULLEY,Y TIMING(53)(METRIC)C6630165	1.00
600 9100	732 WIRE CABLE .037 DIA.BWR#120-17	10.00
605 1004	CABLE TYE, PAN-TY PLTIM-M	5.00
650 0240	INACT.2-56 X 3/4 PAN HD MS SS	4.00
650 1060	3-48 X 3/16 PAN HD PHL MS SS SEMS	2.00
650 1080	3-48 X 1/4 PAN HD MS SS	2.00
650 1081	3-48 X 1/4 FILL HD MS BK OX	1.00
650 2168	4-40 X 1/2 SOC HD CAP (BLACK)	2.00
650 3060	6-32 X 3/16 ALLEN HD SET SCREW SS	2.00
650 3080	6-32 X 1/4 PAN HD PHL MS SS SEMS	1.00
650 3092	6-32 X 1/4 FLAT HD 100 DEG CS MS SS	2.00
650 3100	6-32 X 5/16 PN HD PHL MS SS	10.00
650 3120	6-32 X 3/8 PAN HD PHL MS SS SEMS	3.00
650 3166	6-32 X 1/2 SOC HD LONG LOC SS	2.00
650 4061	8-32 X 3/16 SOC SET SCREW BK OX	1.00
650 4082	8-32X1/4 FL HD PH (PARKER UNDERCUT)	2.00
650 4087	8-32 X 1/4 TRUSS HD SS	4.00
650 4101	8-32 X 5/16 PAN HD PHL DR	4.00
650 4131	8-32X3/8 SOC SET 1/2 DOG POINT BKOX	2.00
650 4205	8-32 X 5/8 SOC HD NYLOCK	4.00
650 6202	10-32X5/8 PAN HD PHL SS	4.00
650 6400	DISC 10-32 X 1 1/4 PAN HD PHL MS	1.00
651 1727	RETAINING RING,CRESC TRUARC 5103-25	9.00
652 0008	6-32 PEM NUT #CL 632-2	4.00
652 0053	1/4-28 HEX NUT 7/16 A.F.X 1/8 THICK	2.00
652 6000	10-32 HEX NUT SS	2.00
652 6005	10-32 ELASTIC STOPNUT	3.00
653 1000	NO. 3 INT T LK WASHER	2.00
653 2000	NO. 4 FLAT WASHER	2.00
653 2002	NO. 4 INT T LK WASHER	2.00
653 3000	NO. 6 FLAT WASHER	16.00
653 3001	NO. 6 INT T LK WASHER	10.00
653 4000	NO. 8 FLAT WASHER	4.00
653 4001	NO. 8 INT T LK WASHER	4.00
653 6000	NO. 10 FLAT WASHER	4.00
653 6009	1/4 INTERNAL TOOTH LOCK WASHER	2.00
654 1250	CLAMP, CABLE 1/8 INCH	2.00
656 0228	TIMING BELT 40DP 153T 1/4W	1.00
656 1003	OPTCR MAGNET ARNOLD I.G. SU 1612	1.00

ASSEMBLY PART NUMBER 177 2212 M3
ASSEMBLY DESCRIPTION 2272 DRUM PLOTTER(METRIC 3 PEN)

LEGEND
*=KIT TAG #=STATUS ITEM ###=FRACTIONAL QTY

PART NUMBER	DESCRIPTION	QUANTITY	
660 0555	SHOE,BRAKE PAD(53)B6630-123	1.00	
279 5050 21	3 PEN & MOUNT ASSY 6630-21	1.00	
000 0005	LABOR PRODUCTION SYSTEMS	4.00	
000 0011	LABOR QUALITY CONTROL	.80	###
279 5050 12	CARRIAGE & BEARING ASSY B6630-12	1.00	
458 0342	PEN MOUNT,CARRIAGE(53)C6630-160	1.00	
465 0249	BEARING,GUIDE PIN(53) B6630-138	6.00	
279 5050 13	BRKT ASSY LH PEN ACTUATOR B6630-13	1.00	
451 4423	BRKT,LH PEN ACTUATOR(53)C6630-116	1.00	
458 0351	HANGER,SPRING(53)B6630-198	1.00	
279 5050 14	BRKT ASSY RH ACTUATOR ASSY B6630-14	1.00	
451 4424	BRKT,RH PEN ACTUATOR(53)C6630-116	1.00	
458 0351	HANGER,SPRING(53)B6630-198	1.00	
279 5050 15	BRKT ASSY MIDDLE PEN ACTR B6630-15	1.00	
451 4426	BRKT,MIDDLE PEN ACTUATR(53)C6630117	1.00	
458 0351	HANGER,SPRING(53)B6630-198	1.00	
320 1013 M	SOLENOID,PEN ACTUATING(53)B6630-212	3.00	
451 4439	BRKT,ACTUATOR SUPPORT(53)D6630-158	1.00	
452 0050	PLATE,3 PEN GUIDE(53)C6630-118	1.00	
458 0341	RETAINER,SPRING(53)B6630-136	6.00	
458 0349	RETAINER,BALL PEN SPRG(53)B6630-186	3.00	
458 0350	HOLDER,PEN(53)C6630-134	3.00	
458 0352	CAP,BALL PEN END(53)B6630-184	3.00	
458 0353	ADAPTOR,BALL PEN BOTTM(53)B6630-185	3.00	
458 0358	CAM,PEN LH(53)B6630-188	1.00	
461 3252	PIN,GUIDE(53)B6630-145	3.00	
461 3253	SHAFT,ACTUATOR(53)B6630-143	1.00	
465 0419	COLLAR,ACTUATOR BRKT(53)B6630-197	3.00	
465 1638	SPRING,COUNTER(53)B6630-153	3.00	
465 1639	SPRING,PRELOAD(53)	3.00	
465 1640	"C"SPRING,END CAP(53)B6630-204	3.00	
465 1642	COMPRESSION SPRING(53)LC-020C-3	3.00	
655 0168	KNOB,ADJUSTMENT(53)B6630-133	3.00	
279 5050 23	X DRIVE & FRAME ASSY(METRIC)6630-23	1.00	
000 0005	LABOR PRODUCTION SYSTEMS	7.00	
000 0011	LABOR QUALITY CONTROL	1.40	###
279 5050 11	SHAFT & SPROCKET ASSY B6630-11	1.00	
461 3265	SHAFT,SPROCKET(53)B6630-214	1.00	
478 0307	PULLEY,MOLDED SPROCKET(12W)6630-176	1.00	
651 1530	ROLL PIN .078 X 1.12 LG SS	1.00	
279 5050 18	MOTOR ASSY X-Y DRIVE C6630-18	1.00	
000 0005	LABOR PRODUCTION SYSTEMS	2.00	

ASSEMBLY PART NUMBER 177 2212 M3
ASSEMBLY DESCRIPTION 2272 DRUM PLOTTER(METRIC 3 PEN)

LEGEND
*=KIT TAG #=STATUS ITEM ###=FRACTIONAL QTY

PART NUMBER	DESCRIPTION	QUANTITY	
000 0011	LABOR QUALITY CONTROL	.40	###
400 0005	# STEPPING MOTOR SUPERIOR HS 25	1.00	
465 0216	TD23 BEARING (RULON) TARBELL#0406-2	1.00	
465 0942	SPRING, MARG RACK RETURN B5776-365	1.00	
465 1110	732 FLYWHEEL B6403-198	1.00	
478 0309	PULLEY,X & Y DRIVE MOTOR C6630-196	1.00	
605 1004	CABLE TYE, PAN-TY PLTIM-M	4.00	
651 1534	ROLL PIN .078 X .81 STEEL	1.00	
651 1734	GRIP RING TRUARC 5555-18	1.00	
653 6018	3/16 ID X 3/4 OD X 1/16 STL.WASHER	1.00	
654 1163 R	SOCKET 20-14 GA(REEL)AMP 61117-4	6.00	
654 1185	6 POS SOC HOUSING AMP 1-480270-0	1.00	
656 0006	732 ANNULUS CORK (RING) B6403-187	1.00	
279 5070 40	SIDE PLATE ASSY LH B6635-40	1.00	
000 0020	LABOR PREP AREA	.01	###
452 0045	SIDE PLATE,LEFT P.F.(62)D6636-235 EC5389	1.00	
461 3198	MP-70 SPRING PIN B6615-167	1.00	
279 5070 41	SIDE PLATE ASSY RH B6635-41	1.00	
000 0020	LABOR PREP AREA	.02	###
452 0046	SIDE PLATE,RIGHT P.F.(62)D6636-235 EC5389	1.00	
461 3198	MP-70 SPRING PIN B6615-167	1.00	
325 0021	ON-OFF ROCKER SW SPDT TB201 TW-B	1.00	
360 0000	FUSE HOLDER 90 DEGREE CONTACT	1.00	
410 2001	LINE FILTER,2 AMP 282	1.00	
420 1000	CORD POWER 3 COND	1.00	
451 2135	COVER,PAPER GUIDE LH(53)D6630-210	1.00	
451 2136	COVER,PAPER GUIDE RH(53)D6630-210	1.00	
451 4450	BRKT,CONNECTOR(36 PIN)(53)C6630-526	1.00	
451 4451	BRKT,A.C.MOUNTING(53)C6630-527	1.00	
452 0055	PLATE,PAPER DR ADJUST(53)B6630-215	2.00	
452 0056	PLATE,LEFT SIDE(53)D6630-100	1.00	
452 0057	PLATE,RIGHT SIDE(53)D6630-218	1.00	
452 0058	PLATE,CAM SPACER(53)B6630-216	2.00	
452 4040	GUIDE,PAPER(53)D6630-201	1.00	
458 0358	CAM,PEN LH(53)B6630-188	1.00	
458 0359	CAM,PEN RH(53)B6630-188	1.00	
461 1543	BLOCK,CAM(MOLDED)(53)C6630-217	2.00	
461 3260	SHAFT,PAPER GUIDE(53)B6630-187	1.00	
461 3262	STUD,SIDE FRAME(53)B6630-208	4.00	
461 3263	STUD,CLUSTER(53)B6630-207	1.00	
465 0219	702 ROLLER BEARING TORR. J45	1.00	
465 0420	COLLAR,SPROCKET(53)C6630-189	1.00	

ASSEMBLY PART NUMBER 177 2212 M3
ASSEMBLY DESCRIPTION 2272 DRUM PLOTTER(METRIC 3 PEN)

LEGEND
*=KIT TAG #=STATUS ITEM ###=FRACTIONAL QTY

PART NUMBER	DESCRIPTION	QUANTITY	
465 0721	BUSHING,FSB-375	2.00	
465 0730	BUSHING,SPROCKET(62)C6636-229	2.00	
465 1614	SPRING,LEE 016A-0	2.00	
478 0307	PULLEY,MOLDED SPROCKET(12W)6630-176	1.00	
478 0310	PULLEY,X TIMING(53)(METRIC)C6630165	1.00	
478 0312	FRONT EXTRUSION(51-53)C6630-180	1.00	
478 0313	REAR EXTRUSION(51-53)C6630-181	1.00	
478 0322	PULLEY,TIMING 1/5P 40T 40XL037	1.00	
600 0000	WIRE 18 GA BLACK UL	2.50	###
600 0005	WIRE 18 GA GREEN UL	2.00	
600 0009	WIRE 18 GA WHITE UL	1.25	###
605 0000	TUBING #10 CLEAR	1.50	###
605 1004	CABLE TYE, PAN-TY PLTIM-M	12.00	
650 0081	2-56 X 1/4 FL HD MS SS	4.00	
650 2066	4-40 X 3/16 FLAT HD 100DEG UC SS	4.00	
650 2098	SCR 4-40 X 1/4 PAN HD PHL LONGLOK	2.00	
650 3080	6-32 X 1/4 PAN HD PHL MS SS SEMS	8.00	
650 3091	SCR,6-32 X 1/4 TRUSS HD NYLOK	4.00	
650 3120	6-32 X 3/8 PAN HD PHL MS SS SEMS	4.00	
650 3204	6-32X5/8 FL HD PHL MS PARKERIZE	4.00	
650 4061	8-32 X 3/16 SOC SET SCREW BK OX	2.00	
650 4101	8-32 X 5/16 PAN HD PHL DR	1.00	
650 4120	8-32 X 3/8 PAN HD PHL MS SS SEMS	4.00	
650 4280	8-32 X 7/8 PAN HD PHL MS SS SEMS	1.00	
650 6201	10-32X5/8 FLANGE WHIZ-LOCK MS ZINC	8.00	
650 6202	10-32X5/8 PAN HD PHL SS	4.00	
651 1724	PLATEN SNAP RING TRUARC #5555-37	1.00	
651 1750	RETAINING RING,TRUARC 5115-37	1.00	
652 3000	6-32 HEX NUT SS	4.00	
652 4001	8-32 SQUARE NUT SS	1.00	
653 3000	NO. 6 FLAT WASHER	12.00	
653 4000	NO. 8 FLAT WASHER	6.00	
653 6000	NO. 10 FLAT WASHER	4.00	
654 1106	MATE + LOCK PIN 60618-4	8.00	
654 1149	PIN HOUSING 1-480305-0	1.00	
654 1238	HEYCO STRAIN RELIEF SR5P-4	1.00	
655 0164	CAP,THUMB SCREW SIBER #83-98-904	1.00	
656 0221	TIMING BELT 120XL025	1.00	
656 0228	TIMING BELT 40DP 153T 1/4W	1.00	

APPENDIX A

ASCII CHART OF PLOTTER CONTROL CODES

LOW ORDER HEX DIGIT	0 (0000)	1 (0001)	2 (0010)	HIGH ORDER 3 (0011)	4 (0100)	5 (0101)	HEX DIGIT N/A	E (1110)	F (1111)
0 (0000)			SPACE	0	@	P		BINARY PLOT VECTOR	PLOT MODE*
1 (0001)			!	1	A	Q		SELECT PEN 1	STEP X-Y-*
2 (0010)			"	2	B	R		SELECT PEN 2	STEP X+Y-*
3 (0011)			#	3	C	S		SELECT PEN 3	STEP X-Y+*
4 (0100)			$	4	D	T		SET HOME	STEP X+Y+*
5 (0101)			%	5	E	U		POWER ON SET HOME	PRINT MODE*
6 (0110)			&	6	F	V		SHORT BINARY PLOT VECTOR	STEP Y-*
7 (0111)			' (apos)	7	G	W			STEP Y+*
8 (1000)			(	8	H	X			STEP X-*
9 (1001)			)	9	I	Y			STEP X+*
A (1010)	SET SPACE*		*	:	J	Z			RESET (HOME)
B (1011)			+	;	K	[			
C (1100)			,	<	L	\			
D (1101)	SET SIZE*		-	=	M	]			
E (1110)	PEN UP		.	>	N	↑			
F (1111)	PEN DOWN		/	?	O	←			

*Note — Denotes codes which are reserved exclusively for use internally by the system when executing the PLOT statement. Use of them is prohibited in alphanumeric variables or HEX(literal set to the plotter.

APPENDIX B

APPENDIX B

PLOTTER MNEMONICS

ACKLG - Acknowledge

$\overline{A_0}$ - $\overline{A_{15}}$ - Address Bits

$\overline{A_0}'$ - $\overline{A_7}'$ - Address Bits

BSY - Not Used

CD - Carriage Down Switch

CE - Chip Enable

CL - Carriage Left Switch

CLK INT - Clock Interrupt

CLR - Clear Switch

CM_1 - CM_4 - Carriage Motor and Sprocket Motor Current Limiting Resistors

CR - Carriage Right Switch

CU - Carriage Up Switch

$\overline{D_0}$ - $\overline{D_7}$ - 8080 Data Bits

$\overline{DATA_1}$ - $\overline{DATA_8}$ - 2200 Input Data

$\overline{DATA\ STROBE}$ - Strobe from 2200

FQ_3 - Plotting Axis Rotation

HLS - Home Limit Switch

HOM - Home Switch

IB_3 - IB_5 - Interrupt Addresses

INP - Input

INT - Interrupt

$\overline{INTAG}$ - Interrupt Acknowledge

IOR - Input/Output Read

$\overline{IOWT}$ - Input/Output Write

LLS - Left Limit Switch

$\overline{LML}$ - Left Master Limit

M_1 - Machine Cycle 1

M_1O - M_7O - Output (Write) Control Bits

M_1N - M_7N - Input Control Bits

MEMR - Memory Read Status Bit

$\overline{MEWT}$ - Memory Write

$\overline{ML}$ - Master Limit

$\overline{MRO}$ - Master Reset Output

$\overline{MRR}$ - Memory Read Control Bit

OUT - Write Status Bit

ϕ_1 - 8080 Clock

ϕ_2 - 8080 Clock

PEN - Pen Up/Down Switch

$\overline{PHY}$ - Photocell

PLOT - Plot Switch

$\overline{PMR}$ -

PS_1 - PS_3 - Pen Solenoid 1,2,3

RD/$\overline{WT}$ - Read/Write Level

REFAS - Not Used

REFST - Not Used

RES - Master Reset

RESET - Prime from 2200

RFEB - Not Used

RLS - Right Limit Switch

RML - Right Master Limit

RQ_3 - Plotting Axis Rotation

$\overline{RUN}$ -

SHL - Set Home/Limits Switch

SLEW - Slew Switch

SPARE - Not Used

SPS - Stepping Motor Power Supply

$\overline{STW}$ -

SYNC - Clock Sync

$\overline{TEA}$ -

TP_{19} - TP_{22} - Carriage Servomotor

TP_{23} - TP_{26} - Sprocket Servomotor

TWR -

$\overline{W_0}$ - Write Status Bit

IMMEDIATE SERVICE NOTICE

NO. 120	DATE: 8/16/76

ITEM(S) / PRODUCT(S):

PERIPHERALS #8

MODEL 2272 LINE SEPARATION

The Model 2272 Digital Drum Plotter may exhibit line separation when plotting a straight line to a distant point and returning to its origin. This line separation is within specification if the plotted line is within .010" (25 mm) of the intended route in both the forward and return direction.

If the separation is greater than .010", check adjustments for the pen drive cable tension, the paper sprocket cover and the carriage brake.

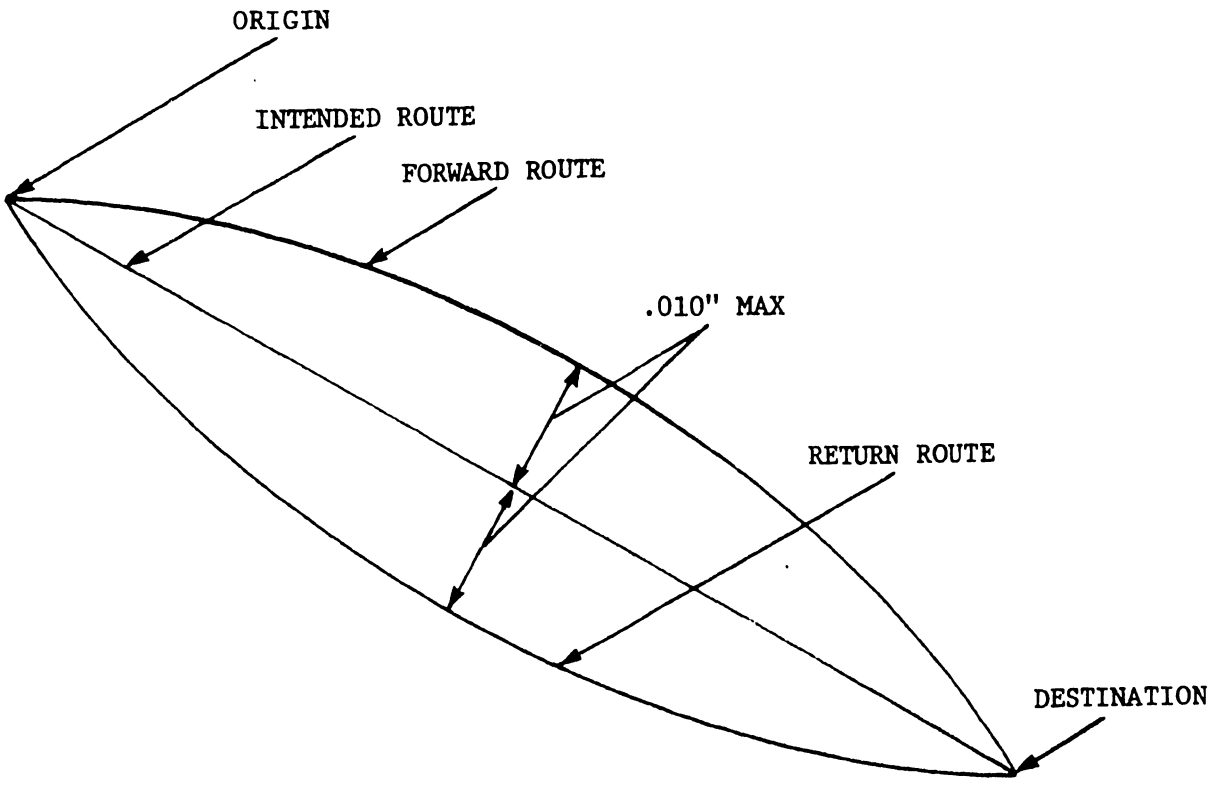

WANG LABORATORIES, INC
836 NORTH STREET TEWKSBURY, MASSACHUSETTS 01876 TEL (617) 851 4111 TWX 710 343 6769 TELEX 94 7421

SECTION 7 ELECTRICAL SCHEMATICS

SECTION 7
ELECTRICAL SCHEMATICS

7.1 INTRODUCTION

Section 7 consists of a signal run list to assist the technician in tracing signals that are wired to one or more electrical boards. Included are the schematics of electrical boards used in the printer listed in numerical order.

7.2 LIST OF ELECTRICAL SCHEMATICS*

DESCRIPTION	DRAWING NUMBER	PAGE NUMBER
Central Processor	E7070	
RAM/PROM Memory	D7071	
Plotter Interface	D7072	
Regulator & Heatsink	E7073	
Motherboard	E7074	

7.3 SIGNAL RUN LIST*

* The listed information is not complete. A completed set of this information will follow when it becomes available.

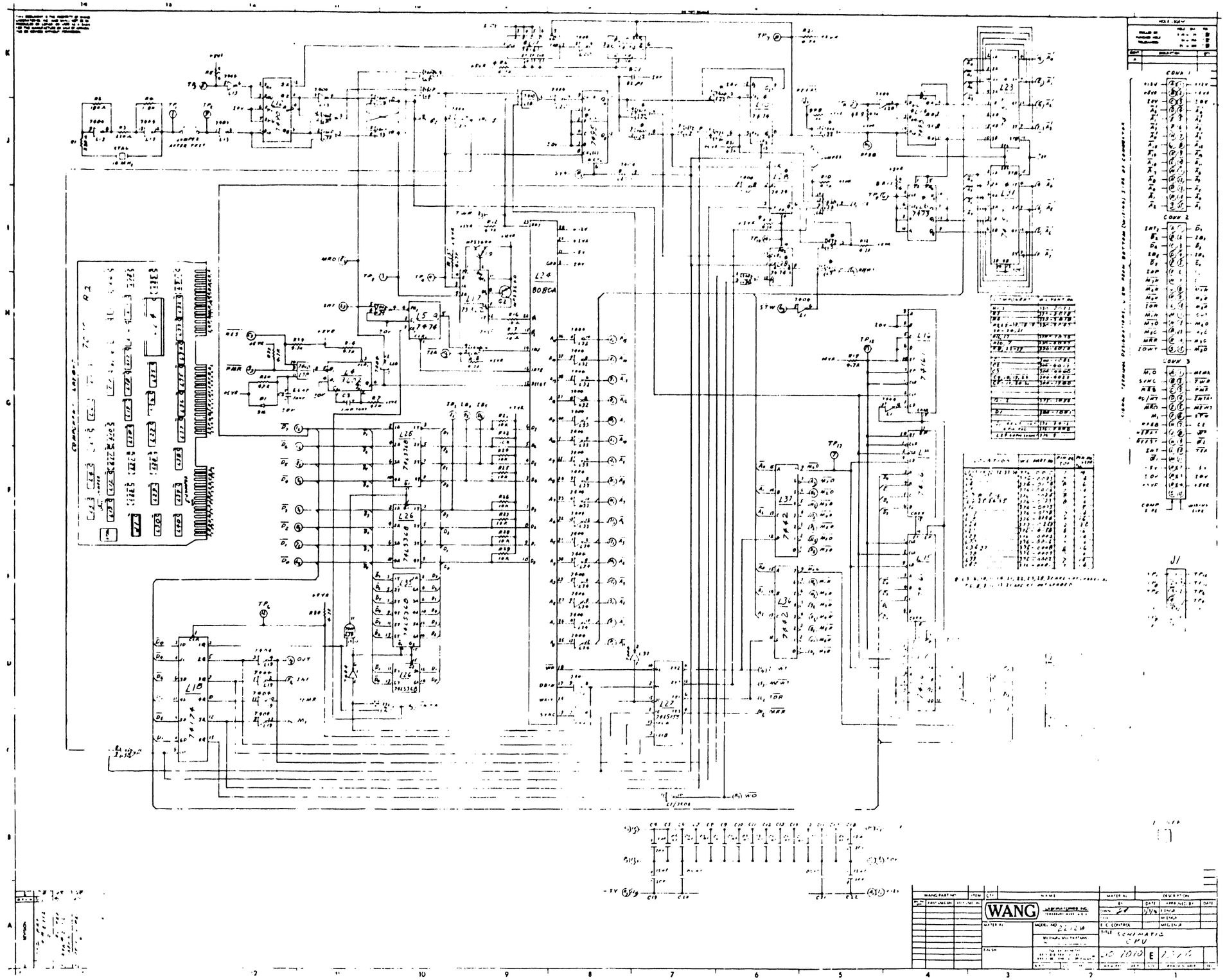
WANG
SCHEMATIC
CPU

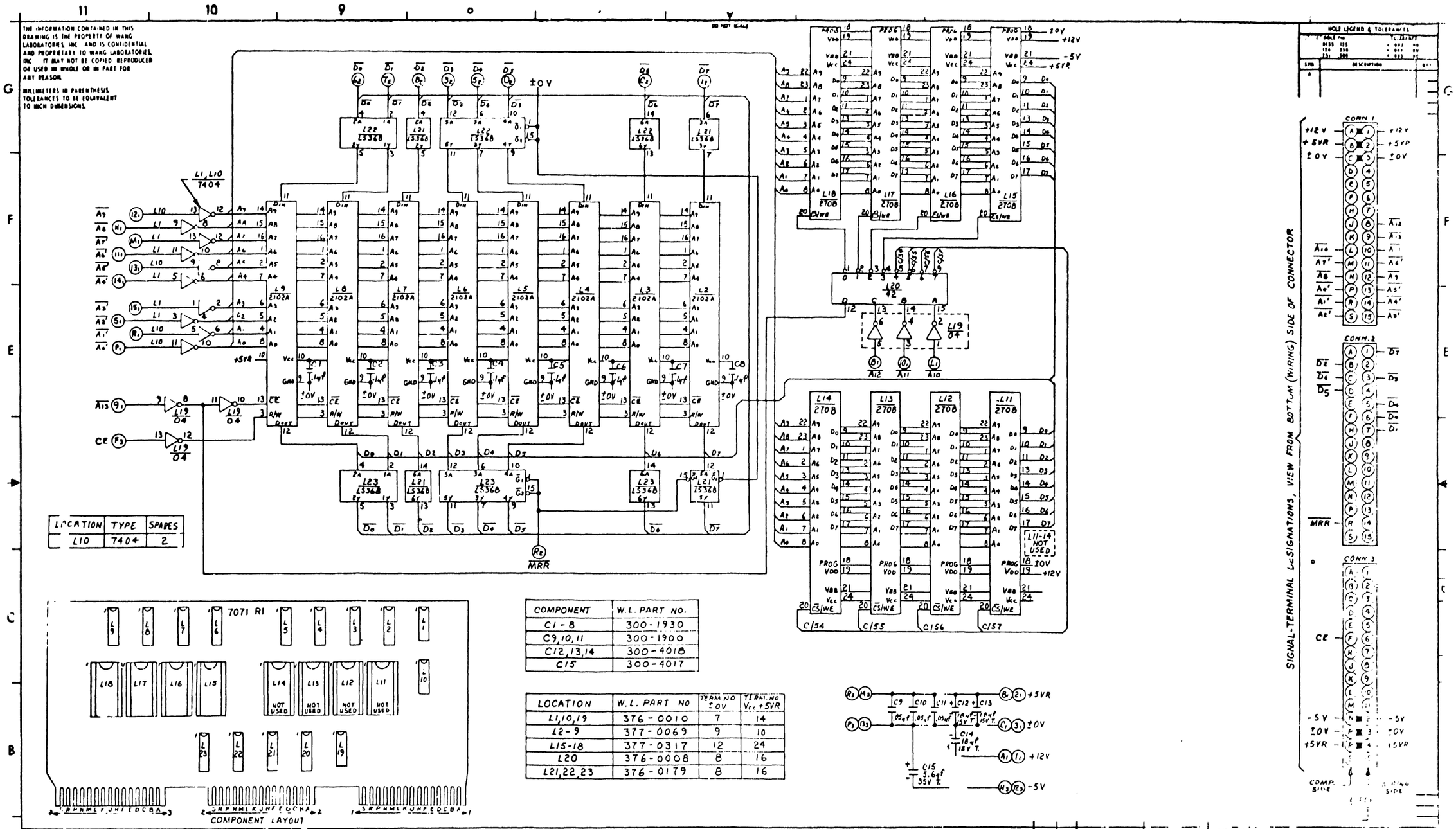

LOCATION	TYPE	SPARES
L10	7404	2

COMPONENT	W.L. PART NO.
C1-8	300-1930
C9,10,11	300-1900
C12,13,14	300-4018
C15	300-4017

LOCATION	W.L. PART NO	TERM NO ±0V	TERM. NO V_{CC} +5VR
L1,10,19	376-0010	7	14
L2-9	377-0069	9	10
L15-18	377-0317	12	24
L20	376-0008	8	16
L21,22,23	376-0179	8	16

NO	REVISION	BY	DATE
0	REDRAWN PER DWR # E113 APP'D:	JR	4-5-76
1	REVISED PER RFA # 2109 APP'D:	JP	4-6-76
2	REVISED PER RFA # 2186 APP'D:	JP	4-6-76

WANG

MODEL NO 2212W

TITLE SCHEMATIC LOG PLOT RAM/PROM MEMORY

210-7071 D 7071 2

WANG PART NUMBER SIZE DRAWING NUMBER REV

SCALE SHT 4 OF 5

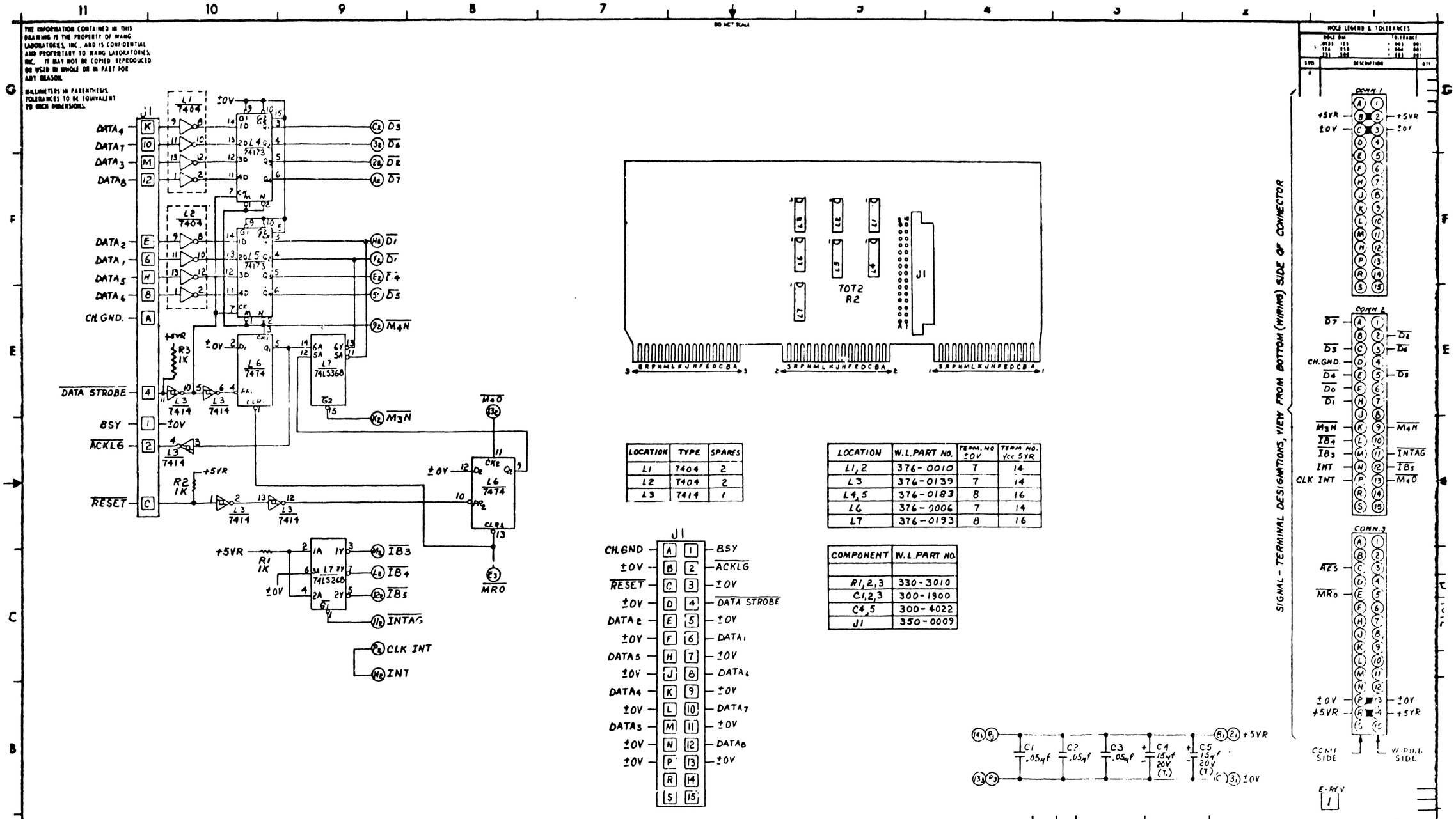

LOCATION	TYPE	SPARES
L1	7404	2
L2	7404	2
L3	7414	1

LOCATION	W.L. PART NO.	TERM. NO ±0V	TERM NO. Vcc 5VR
L1,2	376-0010	7	14
L3	376-0139	7	14
L4,5	376-0183	8	16
L6	376-0006	7	14
L7	376-0193	8	16

COMPONENT	W.L. PART NO.
R1,2,3	330-3010
C1,2,3	300-1900
C4,5	300-4022
J1	350-0009

CH. GND	A	1	BSY
±0V	B	2	ACKLG
RESET	C	3	±0V
±0V	D	4	DATA STROBE
DATA2	E	5	±0V
±0V	F	6	DATA1
DATA5	H	7	±0V
±0V	J	8	DATA6
DATA4	K	9	±0V
±0V	L	10	DATA7
DATA3	M	11	±0V
±0V	N	12	DATA8
±0V	P	13	±0V
	R	14	
	S	15	

QTY	ITEM	WANG PART NO	DRAWING NO	DESCRIPTION
NEXT ASSY				

WANG LABORATORIES INC. TEWKSBURY MASS. U.S.A.

MATERIAL

MODEL NO 22-2W

SEE ENGRG SPECIFICATIONS

FINISH

TOL EX AS NOTED

SCALE 1/4 SHT 4 OF 5

BY	DATE	APPROVED BY	DATE
DWN		E ENGR	
CHK G.D.		M ENGR	
		MFG ENGR	

TITLE SCHEMATIC LOGIBLOC DRUM PLOTTER INTERFACE CARD

210-7072 | D | 7072 | 3

WANG PART NUMBER | SIZE | DRAWING NUMBER | REV

REVISION

NO				
0	ORIG PER DWR E-120 APP'D: SKM	JK	JB	RA
1	REVISED PER RFA # 2105 APP'D: SKM	JK	JB	RA
2	REVISED PER RFA # 2223 APP'D: [illegible]	JK	JB	RA
3	REVISED PER ECN # 5589 APP'D: [illegible]	JK	JB	RA

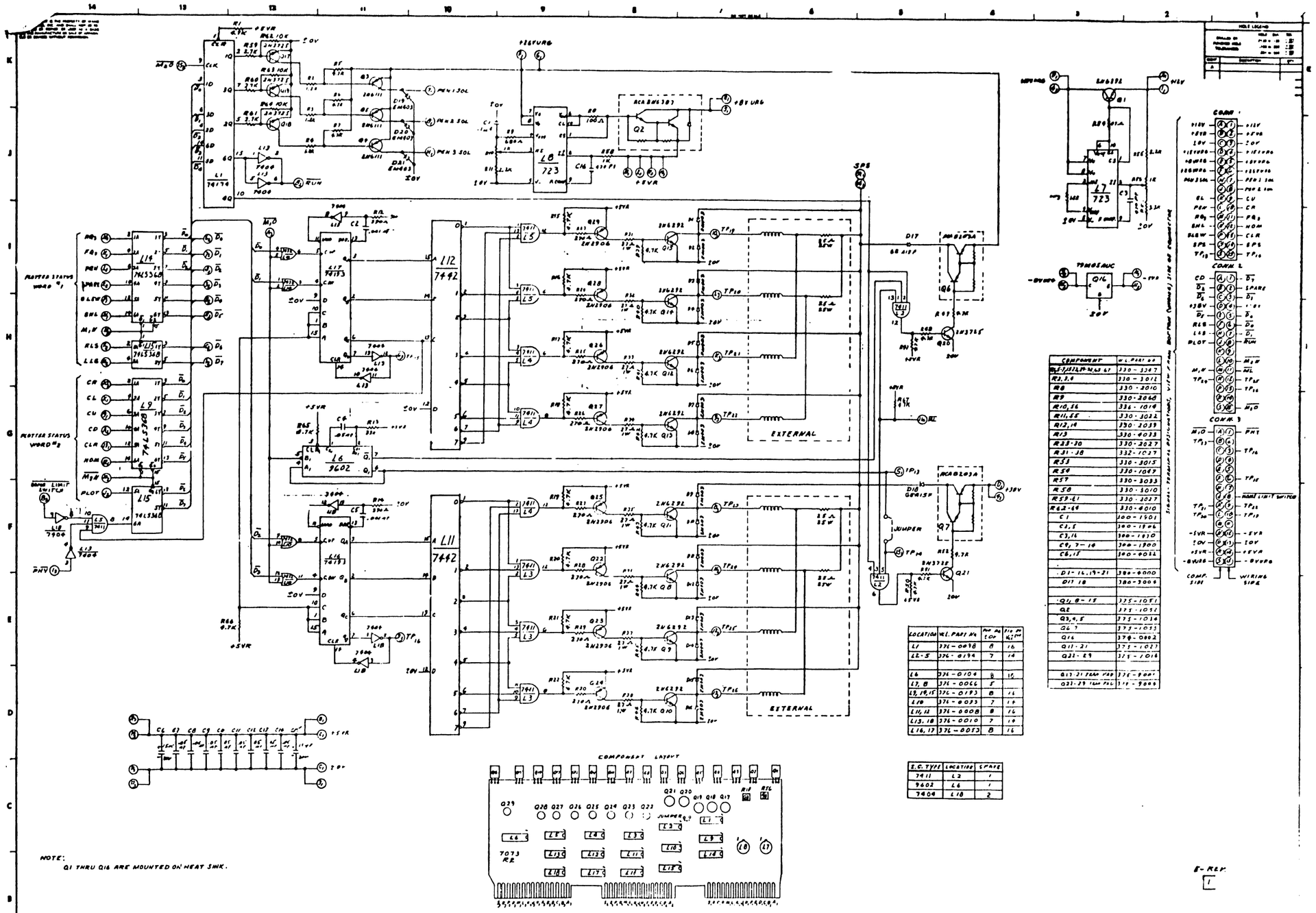

COMPONENT	W.L. PART NO
R1,5-7,13,22,29-32,63-67	330-3047
R2,3,4	330-3012
R8	330-2010
R9	330-2068
R10,56	336-1014
R11,55	330-3022
R12,14	330-2039
R13	330-4033
R23-30	330-2027
R31-38	332-1027
R53	330-3015
R54	330-1047
R57	330-3033
R58	330-3010
R59-61	330-3027
R62-64	330-4010
C1	300-1901
C2,5	300-1906
C3,14	300-1930
C4,7-14	300-1900
C6,15	300-4022
D1-16,19-21	380-4000
D17,18	380-3004
Q1,8-15	375-1051
Q2	375-1052
Q3,4,5	375-1034
Q6,7	375-1033
Q16	378-0002
Q17-21	375-1027
Q22-29	375-1016
Q17-21 TEAM PAD	375-9001
Q22-29 TEAM PAD	375-9004

LOCATION	W.L. PART NO	PER PAD ±0V	PER PAD ±5V
L1	376-0098	8	16
L2-5	376-0194	7	14
L6	376-0104	8	16
L7,8	376-0066	5	
L9,10,15	376-0193	8	16
L10	376-0033	7	14
L11,12	376-0008	8	16
L13,18	376-0010	7	14
L16,17	376-0053	8	16

I.C. TYPE	LOCATION	SPARE
7411	L2	1
9602	L6	1
7404	L18	2

WANG

MODEL NO 2212W

TITLE SCHEMATIC REGULATOR AND HEAT SINK BOARD

210-1013 E 1073

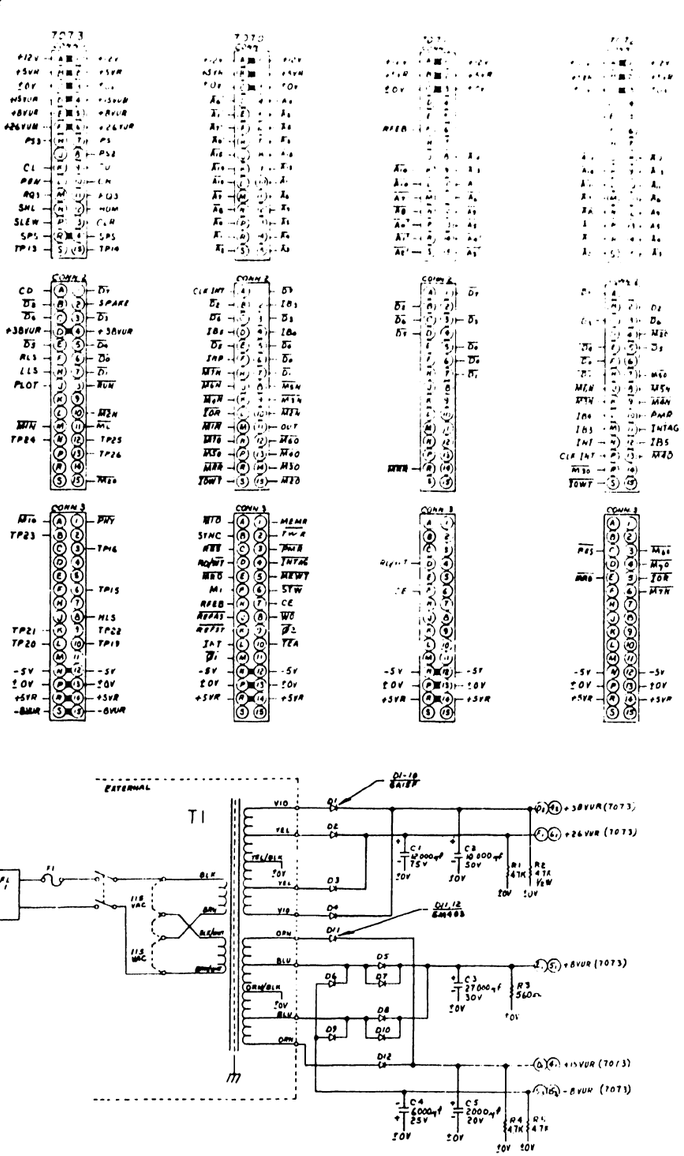

COMPONENT	W L PART NO
C1	300-3067
C2	300-3077
C3	300-3069
C4	300-3073
C5	300-3058
D1-10	380-3004
D11,12	380-4000
J1,2	654-1186
J5	654-1190
J3	350-0021
J4	376-9017
30 PIN CONN.	350-0011
R1,4,5	330-3047
R2	331-3047
R3	330-2036
R6-20	350-4010

ECN

ECN

WANG PART NO	ITEM	QTY	NAME	MATERIAL	DESCRIPTION
			WANG LABORATORIES, INC.	BY	DATE / APPROVED BY / DATE
			MODEL NO 2212W	DRWN JS	E ENGR
			MATERIAL	CHK	M ENGR
			WE SPECIFICATIONS	E C CONTROL	MFG ENGR
			FINISH	TITLE DRUM PLOTTER MOTHERBOARD	
				210-7074	E 7074 1

REVISION	DATE	BY	CHK
ORIG REL	8/1/74		
REVISED PER ECO 2101	10/1/74		
REVISED PER ECO 2202	2/6/75		
REVISED PER ECO 2303	3/26/75		

	7070	7070 J1	7071	7072	7072 J1	7073			7074 J1	7074 J2	7074 J3	7074 J4	7074 J5
±0V	$C_1,3_1$ $P_3,13_3$		$C_1,3_1$ $P_3,13_3$	$C_1,3_1$ $P_3,13_3$	B,D,F J,L,N P,3,5 7,9 11,13	$C_1,3_1$ $P_3,13_3$					P	2,22	S,
+5VR	$B_1,2_1$ $R_3,14_3$		$B_1,2_1$ $R_3,14_3$	$B_1,2_1$ $R_3,14_3$		$B_1,2_1$ $R_3,14_3$						3 22	
-5VUR +8VUR	$N_3,12_3$		$N_3,12_3$	$N_3,12_3$		$N_3,12_3$ $L_1,5_1$							
-8VUR +12V	$A_1,1_1$		$A_1,1_1$	$A_1,1_1$		$S_3,15_3$ $A_1,1_1$							
+15VUR +26VUR						$D_1,4_1$ $F_1,6_1$							
+38VUR CH. GRND.				D_2	A	$D_2,4_2$							
ACKLG $\overline{A_0}$	P_1			P_1	2						16		
$\overline{A_1}$ $\overline{A_2}$	R_1 S_1			R_1 S_1							S 15		
$\overline{A_3}$ $\overline{A_4}$	15_1 14_1			15_1 14_1							17 V		
$\overline{A_5}$ $\overline{A_6}$	13_1 11_1			13_1 11_1							T 18		
$\overline{A_7}$ $\overline{A_8}$	M_1 H_1		H_1	M_1 H_1							W 19		
$\overline{A_9}$ $\overline{A_{10}}$	12_1 L_1		12_1 L_1	12_1 L_1							X U		
$\overline{A_{11}}$ $\overline{A_{12}}$	10_1 8_1		10_1 8_1	10_1 8_1							S Y		
$\overline{A_{13}}$ $\overline{A_{14}}$	9_1 K_1		9_1 K_1	9_1 K_1							21 22		

	7070	7070 J1	7071	7072	7072 J1	7073			7074 J1	7074 J2	7074 J3	7074 J4	7074 J5
$\overline{A_{15}}$ $\overline{A_0}$'	J_1 H_1		P_1	J_1							20		
$\overline{A_1}$' $\overline{A_2}$'	E_1 S_1		R_1 S_1										
$\overline{A_3}$' $\overline{A_4}$'	7_1 4_1		15_1 14_1										
$\overline{A_5}$' $\overline{A_6}$'	6_1 D_1		13_1 11_1										
$\overline{A_7}$' BSY	F_1		M_1		1								
CD CE	7_3		F_3			A_2						6	
CL CLK INT	A_2			P_2		K_1						8	
CLR CM_1						13_1			6			14	
CM_2 CM_3									5	6			
CM_4 CR						10_1				5		5	
CU $\overline{D_C}$	6_2		6_2	F_2		9_1 6_2					8	9	
$\overline{D_1}$ D_2	7_2 B_2		7_2 B_2	H_2 2_2		7_2 B_2					H 14		
	3_2 5_2		3_2 5_2	C_2 E_2		3_2 5_2					P 10		
$\overline{D_5}$ $\overline{D_6}$	E_2 C_2		D_2 C_2	5_2 3_2		E_2 C_2					K 12		
$\overline{D_7}$ DATA	1_2		1_2	A_2	6	1_2					M		

	7070	7070 J1	7071	7072	7072 J1	7073			7074 J1	7074 22	7074 J3	7074 J4	7074 J5
$DATA_2$ $DATA_3$					E M								
$DATA_4$ $DATA_5$					K H								
$DATA_6$ $DATA_7$					8 10								
$DATA_8$ $\overline{\text{DATA STROBE}}$					12 4								
FQ_3						11_1						18	
HLS HOM						8_3 12_1						11 7	
IB_3 IB_4	2_2 4_2			M_2 L_2									
IB_5 INP	D_2 F_2			12_2							N		
INT $\overline{\text{INTAG}}$	L_3 4_3			N_2 11_2									
IOR $\overline{\text{IOWT}}$	L_2 S_2			5_3 S_2									
LLS $\overline{\text{LML}}$						H_2							3 6
M_1 $\overline{M_1 0}$	F_3 A_3					A_3					9		
$\overline{M_2 0}$ $\overline{M_3 0}$	15_2 14_2			4_2 R_2		15_2							
$\overline{M_4 0}$ $\overline{M_5 0}$	13_2 P_2			13_2 7_2									
$\overline{M_6 0}$ $\overline{M_7 0}$	12_2 N_2			3_3 4_3									

	7070	7070 J1	7071	7072	7072 J1	7073			7074 J1	7074 J2	7074 J3	7074 J4	7074 J5
$\overline{M_1N}$	M_2					M_2							
$\overline{M_2N}$	10_2					10_2							
$\overline{M_3N}$	9_2			K_2									
$\overline{M_4N}$	K_2			9_2									
$\overline{M_5N}$	8_2			8_2									
$\overline{M_6N}$	J_2			J_2									
$\overline{M_7N}$	H_2			6_3									
MEMR	1_3										11		
$\overline{MEWT}$	5_3												
$\overline{ML}$						11_2							
$\overline{MRO}$	E_3			E_3									
$\overline{MRR}$	R_2		R_2										
OUT	11_2										L		
ϕ_1	M_3										5		
ϕ_2	9_3										6		
PEN						L_1						19	
$\overline{PHY}$						1_3						16	
PLOT						J_2						24	
$\overline{PMR}$	3_3			10_2									
PS_1						7_1							2
PS_2						8_1							1
PS_3						H_1							4
RD/$\overline{WT}$	D_3		D_3										
REFAS	J_3										2		
REFST	K_3										4		
RES	C_3			C_3							D		
$\overline{RESET}$					C								
RFEB	H_3		F_1										
RLS						F_2						12	
$\overline{RML}$												13	
RO						M_1						17	

	7070	7070 J1	7071	7072	7072 J1	7073			7074 J1	7074 J2	7074 J3	7074 J4	7074 J5
$\overline{\text{RUN}}$ SHL						8_2 N_1						4 10	
SLEW SPARE						P_1 2_2						15 20	
SPS						$R_1, 14_1$							
$\overline{\text{STW}}$ SYNC	6_3 B_3										13 E		
$\overline{\text{TEA}}$ TP19	10_3					10_3			2		B		
TP20 TP21						L_3 K_3			1 4				
TP22 TP23						9_3 B_3			3	2			
TP24 TP25						N_2 12_2				3 4			
TP26 $\overline{\text{TMR}}$	2_3					13_2				1	A		
$\overline{W_0}$	8_3										7		

WANG LABORATORIES, INC

ONE INDUSTRIAL AVENUE, LOWELL, MASSACHUSETTS 01851, TEL (617) 459-5000, TWX 710 343-6769, TELEX 94-7421

PRINTED IN U.S.A.

END