EFF.	REV.	ECO	BY	DESCRIPTION	APP	DATE
	~	~	JRD	PROTO RELEASE	[illegible]	[illegible]
	~	~	SK	RELEASE TO PROD.	[illegible]	[illegible]
2/10/6	A	1786	G.B.	REVISE ELECT. PER REC 1526	[illegible]	2/10/6

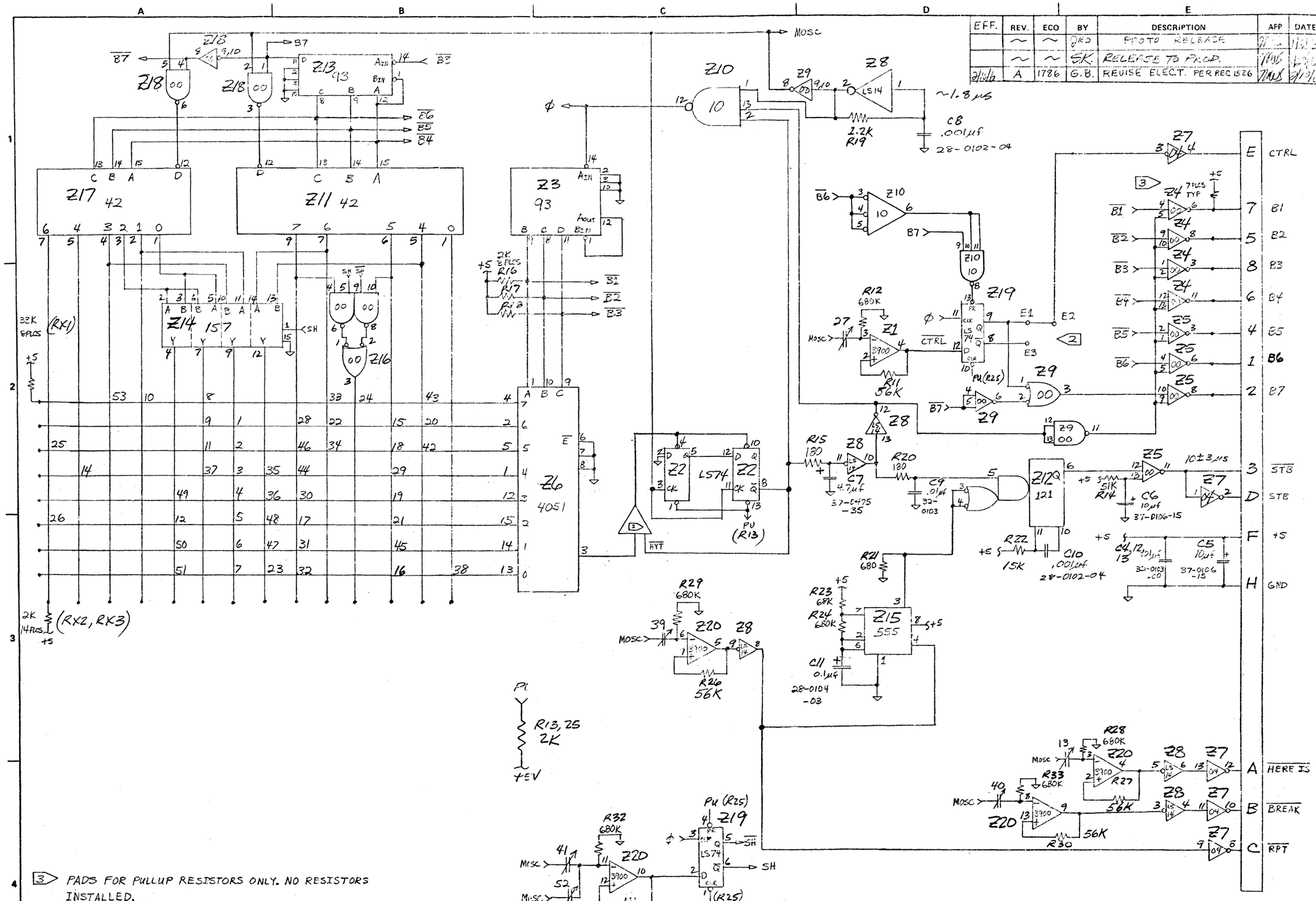

3 PADS FOR PULLUP RESISTORS ONLY. NO RESISTORS INSTALLED.

2 TO MAKE $\overline{CTRL}$ INSTEAD OF CTRL, CUT TRACE FROM E1 to E2 AND INSTALL JUMPER FROM E1 to E3.

1 STANDARD DETECTION CIRCUIT.

NOTICE OF CONFIDENTIAL INFORMATION

INFORMATION CONTAINED HEREIN IS CONFIDENTIAL AND IS PROPERTY OF KEY TRONIC CORPORATION. WHERE FURNISHED WITH A PROPOSAL THE RECIPIENT SHALL USE IT SOLELY TO EVALUATE THE PROPOSAL. WHERE FURNISHED TO A CUSTOMER IT SHALL BE USED SOLELY FOR PURPOSES OF INSPECTION, INSTALLATION OR MAINTENANCE. WHERE FURNISHED TO A SUPPLIER IT SHALL BE USED SOLELY IN THE PERFORMANCE OF WORK CONTRACTED FOR BY THIS COMPANY.

THE INFORMATION SHALL NOT BE USED OR DISCLOSED BY THE RECIPIENT FOR ANY OTHER PURPOSE WHATSOEVER.

MANUFACTURE PARTS AND/OR ASSY'S PER K.T.C. DOCUMENT: F.T.R. 36-0576

UNLESS OTHERWISE NOTED ALL DIMENSIONS ARE IN INCHES

XXX DIMENSION NOT TO SCALE

USED ON: KTC STANDARD ASR 33

RELEASED	[illegible]	
APP.	MWS	11/7/6
CH.	JWS	[illegible]
DR.	JRD	[illegible]

TOL. EXCEPT AS NOTED

HOLE DIA.

FRACT. ± 1/64"

XX ± .01"

XXX ± .005"

ANG. ± 1°

ITEM	PART NO.	DESCRIPTION	QTY.

SCALE ~

TITLE: SCHEMATIC

key tronic corporation

SPOKANE, WASH., U.S.A.

DWG. NO. 35-1466

SHEET 1 OF 2

C

REV.	ECO	BY	DESCRIPTION	APP	DATE
~	~	SK	PROTO RELEASE	[illegible]	[illegible]
~	~	SK	RELEASE TO PROD.	[illegible]	[illegible]
2-5-6	A	1786 1844	G.B	REV TO -002D PCB, REMOVE [illegible] Add R35, CHG R21, Add -003 ASSY (REC [illegible])	[illegible]	[illegible]
3/11/6	B	~	A.C.	ADD -004 ASSY (REC 1579) CHG FROM 1 OF 6 TO 1 OF 7	[illegible]	3/11/6
4-20-6	C	~	MS	REVISED NOTE 3	[illegible]	4-20-6
MAY 76	D	2049	MS	CHG 3900 BREDBACK RESISTORS TO 56K	[illegible]	5-13-6
6-21-6	E	2058	MS	ADD C3 (100 PF)	[illegible]	5-20-6
12-13-76	F	2295	W.M.	CHG. PER. ECO 2295	[illegible]	7-7-76

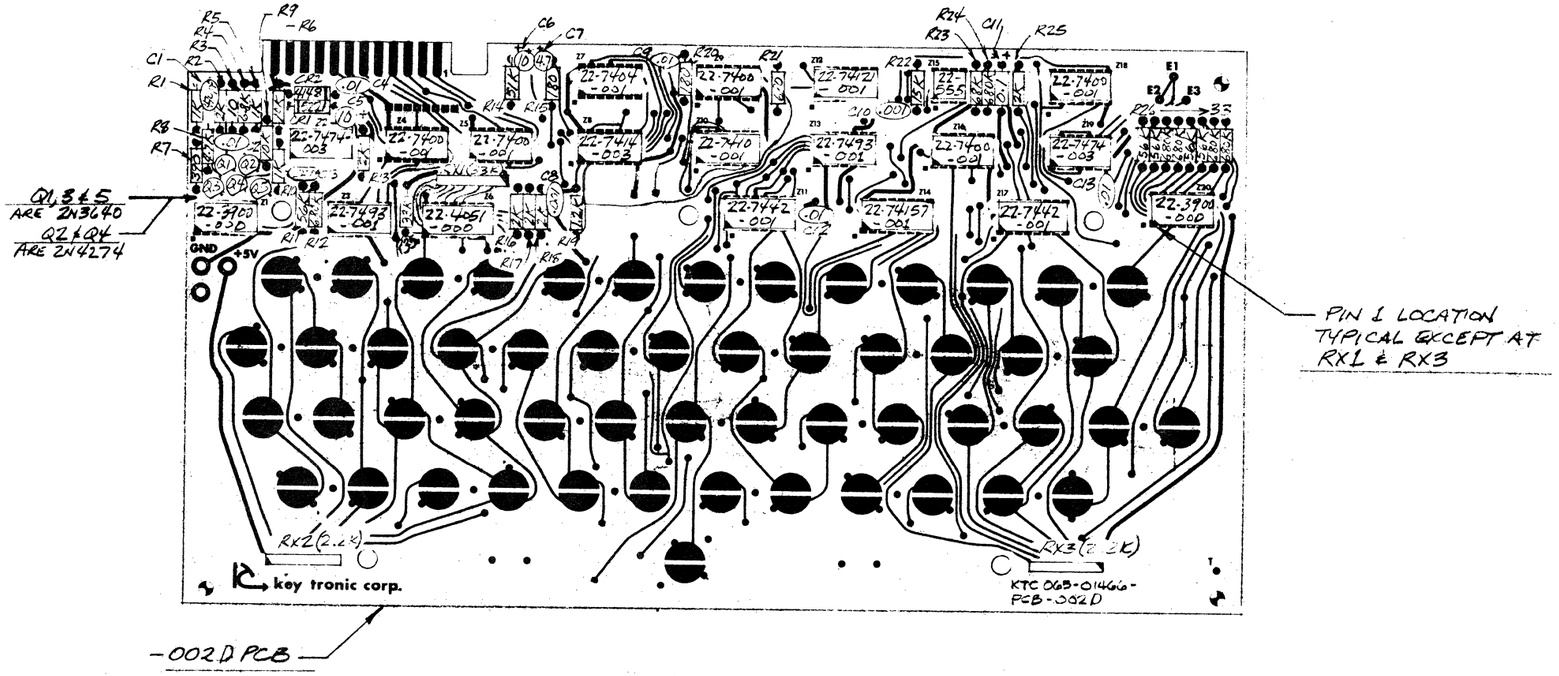

-001, -003 & -004 ASSY

SEE SHEET 3 FOR MECH. ASSY &
SHEET 4 FOR -001 KEYTOP SET
SHEET 5 FOR -003 KEYTOP SET
SHEET 7 FOR -004 KEYTOP SET

2. RUBBER STAMP APPROPRIATE DASH NO. AFTER KTC PART NUMBER [BLACK]
1. APPLY DATE-SERIAL NO. PRESURE ADHESIVE TAG, TO COMPONENT SIDE OF PCB

NOTES

NOTICE OF CONFIDENTIAL INFORMATION
INFORMATION CONTAINED HEREIN IS CONFIDENTIAL AND IS PROPERTY OF KEY TRONIC CORPORATION. WHERE FURNISHED WITH A PROPOSAL THE RECIPIENT SHALL USE IT SOLELY TO EVALUATE THE PROPOSAL. WHERE FURNISHED TO A CUSTOMER IT SHALL BE USED SOLELY FOR PURPOSES OF INSPECTION, INSTALLATION, OR MAINTENANCE. WHERE FURNISHED TO A SUPPLIER IT SHALL BE USED SOLELY IN THE PERFORMANCE OF WORK CONTRACTED FOR BY THIS COMPANY.
THE INFORMATION SHALL NOT BE USED OR DISCLOSED BY THE RECIPIENT FOR ANY OTHER PURPOSE WHATSOEVER.

MANUFACTURE PARTS AND/OR ASSY'S PER K.T.C. DOCUMENT: M006 M007

UNLESS OTHERWISE NOTED ALL DIMENSIONS ARE IN INCHES
XXX DIMENSION NOT TO SCALE
USED ON: KTC STD A SR-33
RELEASED: 1/29/6
APP. MS 1/9/6
CH. GB 1/9/76
DR. SK 1/6/76

TOL. EXCEPT AS NOTED
HOLE DIA:
FRACT. ± 1/64"
XX ± .01"
XXX ± .005"
ANG. ± 1°

ITEM	PART NO.	DESCRIPTION	QTY
SCALE ~		TITLE KEYBOARD ASSY (ELECTRICAL)	

key tronic corporation
SPOKANE, WASH. U.S.A.
DWG. NO. 65-0466
SHEET 1 OF 1

TROUBLE SHOOTING KTC DETECTOR CIRCUIT

USED ON

65-1466

REV.	DESCRIPTION	APP.	DATE

SCALE	TITLE TROUBLE SHOOTING KTC DETECTOR CIRCUIT		
key tronic corporation SPOKANE, WASH. U.S.A.	DR. WJB	DATE 10/19/6	
	APP.	DATE	
	DWG. NO. 36-0729		
	SHEET 1		

Requires 65-1466 Sheet 1, 35-1466 Sheet1, and Oscilloscope.

A. SET-UP

1. Connect external trigger of the scope to the slowest bit on the counter (Z13-8). Adjust the sweep rate to one period of this signal (equivalent to one keyboard scan). When signal is located use intensify mode for viewing short pulses.

2. Ground both vertical inputs on the scope and set both base lines to the same reference levels. Set V/Cm to 1V/Cm.

3. Unground the inputs, you are ready to look at the signals on the keyboard. Ref: Connect probe ground leads to ground near the point being measured.

B. PROCEDURE

1. In order to verify that the fault is in the detector, connect probe "A" to the collector of Q2 (2N4274).

2. Repeatedly depress a key and ascertain if a negative pulse of approximately 1000 nsec is present (coinciding with key depression).

3. If negative pulses were observed, the problem does not lie in the detector and the validation and strobe processing logic should be checked.

4. If a negative pulse was not found at Q2, check the detector.

5. Before beginning to trouble shoot the detector, verify that Z11 (7442) Z17 (7442), and Z6 (4051) are working by checking inputs.

C. COMMON CHECKOUT

NOTE: After any changes to the circuit check the keyboard to ascertain whether the malfunction has been repaired.

1. Check to voltage level at the cathode of CR1 (IN5221B). It should be 2.1V. If the proper level is not present replace CR1. Verify that this level is also present at the base of Q4, if not, check trace for continuity.

2. Check the base of Q1 (2N3640) to verify the presence of a level of approximately 3.5V. If this level is not present verify continuity of the following circuit.

REV.	DESCRIPTION	APP.	DATE

SCALE	TITLE TROUBLE SHOOTING KTC DETECTOR CIRCUIT		
key tronic corporation SPOKANE, WASH. U.S.A.	DR.	DATE	
	APP.	DATE	
	DWG. NO. 36-0729		
		2	

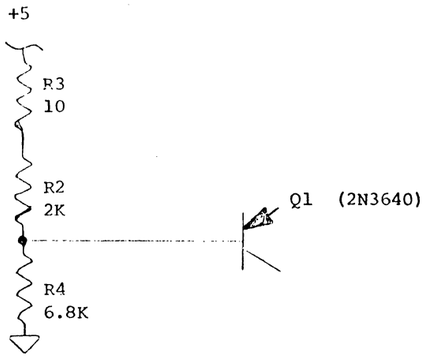

3. Verify that when a key is repeatedly depressed a corresponding negative pulse occurs at the base of Q1.

If no pulse occurs check R5 (1K) and CR2 (IN4148).

D. SIGNAL TRACING

1. Connect probe "A" to the base of Q3 (2N3640) and verify a positive pulse of approximately 500 nsec is present when a key is depressed.

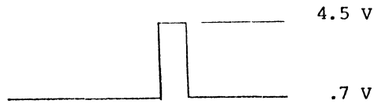

NOTE: Probe ground must be used throughout this section.

Replace Q4 (2N4274, Q5 (2N3640), R8 (4.7K), and C3 (220pf) if the pulse is not present.

2. Connect probe "A" to the emitter of Q3 and verify the presence of a 1000 nsec positive pulse when depressing a key.

If the pulse is not present replace Q3 (2N3640) and R1 (1K).

REV.	DESCRIPTION	APP.	DATE

SCALE	TITLE: TROUBLE SHOOTING KTC DETECTOR CIRCUIT
key tronic corporation SPOKANE, WASH. U.S.A.	DR. / DATE
	APP. / DATE
	DWG. NO. 36-0729
	SHEET 3

3. Connect probe "A" to the collector of Q1 (2N3640) and verify the presence of a 1000 ns positive pulse when depressing a key.

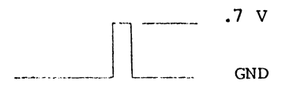

If the pulse is not present replace Q1 and R9 (10K).

4. Connect probe "A" to the collector of Q2 (2N4274) and verify the presence of a 1000 nsec negative pulse when depressing a key.

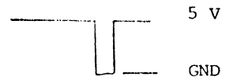

If the pulse is not present replace Q2 and R6 (10K).

5. This completes the checkout of the detector.

REV.	DESCRIPTION	APP.	DATE

SCALE	TITLE: TROUBLE SHOOTING KTC DETECTOR CIRCUIT
key tronic corporation SPOKANE, WASH. U.S.A.	DR. / DATE
	APP. / DATE
	DWG. NO. 36-0729
	SHEET 4