May 1974

Information contained in this manual is applicable to both the COMp 80 Microform Composition System and the FR 80 Precision Graphics Recorder except for pages 86, 87, and 88, which apply only to the COMp 80.

COMp 80/FR 80
USER'S MANUAL

PUB NO. 90367A

COPY NO. 224

INFORMATION INTERNATIONAL®

5933 Slauson Avenue, Culver City, CA 90230

Telephone (213) 390-8611

CHANGE RECORD

Change No.	Date of Issue	Signature of Person Entering Change in This Book	Date of Entry
1	*12 Apr 72*	*Information International*	*12 Apr 72*
2	*27 Sep 72*	*Information International*	*27 Sep 72*
3	*19 Dec 72*	*Information International*	*19 Dec 72*
4	*24 May 74*	*Information International*	*24 May 74*
4A	*24 May 74*	*Information International*	*24 May 74*
5 and 5A	*07 Apr 75*	*Information International*	*07 Apr 75*
6	27 Apr 76	Information International	27 Apr 76

Copyright © 1973 by Information International, Inc.

All rights reserved. No part of this work covered by the copyright hereon may be reproduced or copied in any form or by any means -- graphic, electronic, or mechanical, including photocopying, recording, taping, or information storage and retrieval systems -- without written permission of the publisher.

Made in the United States of America.

Published by Information International, Inc.
5933 Slauson Avenue
Culver City, California 90230

INFORMATION INTERNATIONAL®

5933 Slauson Ave., Culver City, CA 90230 (213) 390-8611

TECH MANUAL CHANGE NOTICE

No. 76-03

27 Apr 76

To: All holders of subject manual

From: A. Sorenson

SUBJECT: CHANGE NO. 6 to
Pub. No 90367A: COMp 80/FR 80 User's Manual, 3rd Edition

Attachments: Page 7 & new page 8; page 87 & revised page 88.

Instructions:

1. Remove and destroy existing pages 7/8 and 87/88 and replace them with the attached sheets.

2. Record completion of Change 6 on CHANGE RECORD at front of manual.

C O N T E N T S

Chapter 1 - INTRODUCTION
The FR 80 System, p 1
    Input Section, p 1
    Processor, p 4
    Data Translator, p 4
    Recording Unit, p 4

Chapter 2 - FR 80 FEATURES
Magnetic Tape Transport, p 5
Teletype, p 5
Display Monitor, p 5
Frame Rotation, p 6
Disk, p 6
Forms Overlay Capability, p 6
Raster Image Size, p 6
    Plot, p 7
    Print, p 7
Frame Butting, p 9
Vector Generator, p 9
Color Recording, p 9
    Up to Four Colors, p 10
    Up to Seven Colors, p 10
    Up to Thirteen Colors, p 10
Characters, p 11
    Character Fonts, p 11
    Character Size, p 11
    Character Rotation, p 13
    Character Speed, p 13
Gray Level Recording, p 13
High-Speed Page Print System, p 13

Chapter 3 - APPLICATIONS SOFTWARE
Host Computer Software, p 14
    SC 4020 Routines, p 14
    FRESCO, p 14
    IGS (Integrated Graphics System), p 14
    3D Plots, p 15
    Other Host Computer Software, p 15
Standard FR 80 Software, p 15
    Print Simulators, p 15
    SC 4020 Simulator, p 18
    META Interpreter, p 19
    CalComp Simulator, p 20
Forms Compiler, p 21
FR 80 Data Format, p 22

Chapter 4 - FR 80 OUTPUT
Cameras, p 23
    Model 8020 35mm Sprocketed Camera, p 23
    Model 8021 16mm Sprocketed Camera, p 23
    Model 8022 16mm Unsprocketed Camera, p 23
    Model 8023 35mm Unsprocketed Camera, p 23
    Model 8024 16mm Unsprocketed Camera, p 24
    Model 8025 105mm Unsprocketed Camera, p 24
    Model 8026 35mm Unsprocketed Camera, p 24
Film Formats, p 24
    Microfiche, p 24
    Fiche Titling Format, p 25
    Roll Film, p 28
Types of Output, p 28

Chapter 5 - APPLICATIONS
Business Applications, p 36
    Retrieval, p 36
    Charts and Graphs, p 36

Chapter 5 - APPLICATIONS (Continued)
Scientific, p 37
    Gray-Level Recording, p 37
    Plotting, p 38
    Computer Animation, p 38
Engineering, p 39
    Engineering Data Plots, p 39
    Engineering Drawings, p 39
    Printed Circuit Boards, p 40
    Integrated Circuit Masks, p 40
    Numerical Control Applications, p 41
    PERT (CPM) Networks, p 41
Publishing, p 41

Chapter 6 - CARRIAGE CONTROLS, p 42
Fiche Titling Format, p 46

Chapter 7 - CHARACTER CODES, p 49

Chapter 8 - FORM DESIGN LANGUAGE
Form Design Syntax, p 55
Sample Form, p 62

Chapter 9 - FR 80 STANDARD DATA FORMAT
General Description, p 65
Tape Format, p 66
Command Format, p 67
Coordinate Commands, p 67
Variable Length Commands - Checkpoint Delimiters, p 68
    Checkpoint Delimiters, p 68
Variable Length Commands - Not Checkpoint Delimiters, p 71
Error Messages, p 84
Summary of FR 80 Data Format, p 85
COMp 80 Supplement to FR 80 Data Format, p 86

I L L U S T R A T I O N S

Chapter 1 - INTRODUCTION
Figure 1-1. Basic FR 80 System, p 2

Chapter 6 - CARRIAGE CONTROLS
Figure 6-1. Fiche Titling Example, p 48

T A B L E S

Chapter 2 - FR 80 FEATURES
Table 2-1. FR 80 Cameras and Film Formats, p 8
Table 2-2. Nominal FR 80 Character Height in Scope Points, p 12

Chapter 4 - FR 80 OUTPUT
Table 4-1. FR 80 Microfiche Formats, p 25

Chapter 6 - CARRIAGE CONTROLS
Table 6-1. ASA Carriage Controls, p 42
Table 6-2. 360 Carriage Controls, p 43
Table 6-3. 1401 Carriage Controls, p 44
Table 6-4. Information International Carriage Controls, p 45

Chapter 8 - FORM DESIGN LANGUAGE
Table 8-1. Form Design Syntax Commands, p 55

Chapter 1
INTRODUCTION

1.1 The FR 80 User's Manual is designed to be of assistance to the "open shop" user of the FR 80 Computer Output Microfilm (COM) Recorder. Chapters 1 and 2 contain a brief introduction to COM recording and a description of the FR 80 system. Chapter 3 describes the applications software available to the FR 80 user. Chapter 4 explains the FR 80's cameras and film outputs. Chapter 5 discusses typical applications currently run on the FR 80. Chapters 6 through 9 present detailed information concerning the FR 80's carriage controls, character codes, form design language, and standard data format.

THE FR 80 SYSTEM

1.2 The FR 80 is designed and manufactured by Information International, Inc. (hereinafter called III). The configuration of the FR 80 system is shown in figure 1-1. The system normally operates off-line. While reading digital data from magnetic tape, the system processes the information and records characters and vectors on a high-precision, cathode-ray tube. A special camera system photographs the face of the tube. The resulting film must be processed in an off-line unit. The method of processing will determine the polarity of the photographic image as positive or negative. Film duplicates, enlarged paper reproductions, or printing masters can be made from the original film.

1.3 The FR 80 is organized into four functional sections:

1. Input section
2. Processor
3. Data translator
4. Recording unit

Input Section

1.4 Standard FR 80 input consists of 7- or 9-track magnetic tape units, a master tape controller, Teletype, and paper tape reader. The master tape controller may be expanded to four magnetic tape units and provides switch selection of the desired input. The input section controls the flow of data to the processor at a nominal transfer rate of 30,000 18-bit words per second. The Teletype and

F I G U R E 1 - 1 . B A S I C F R 8 0 S Y S T E M

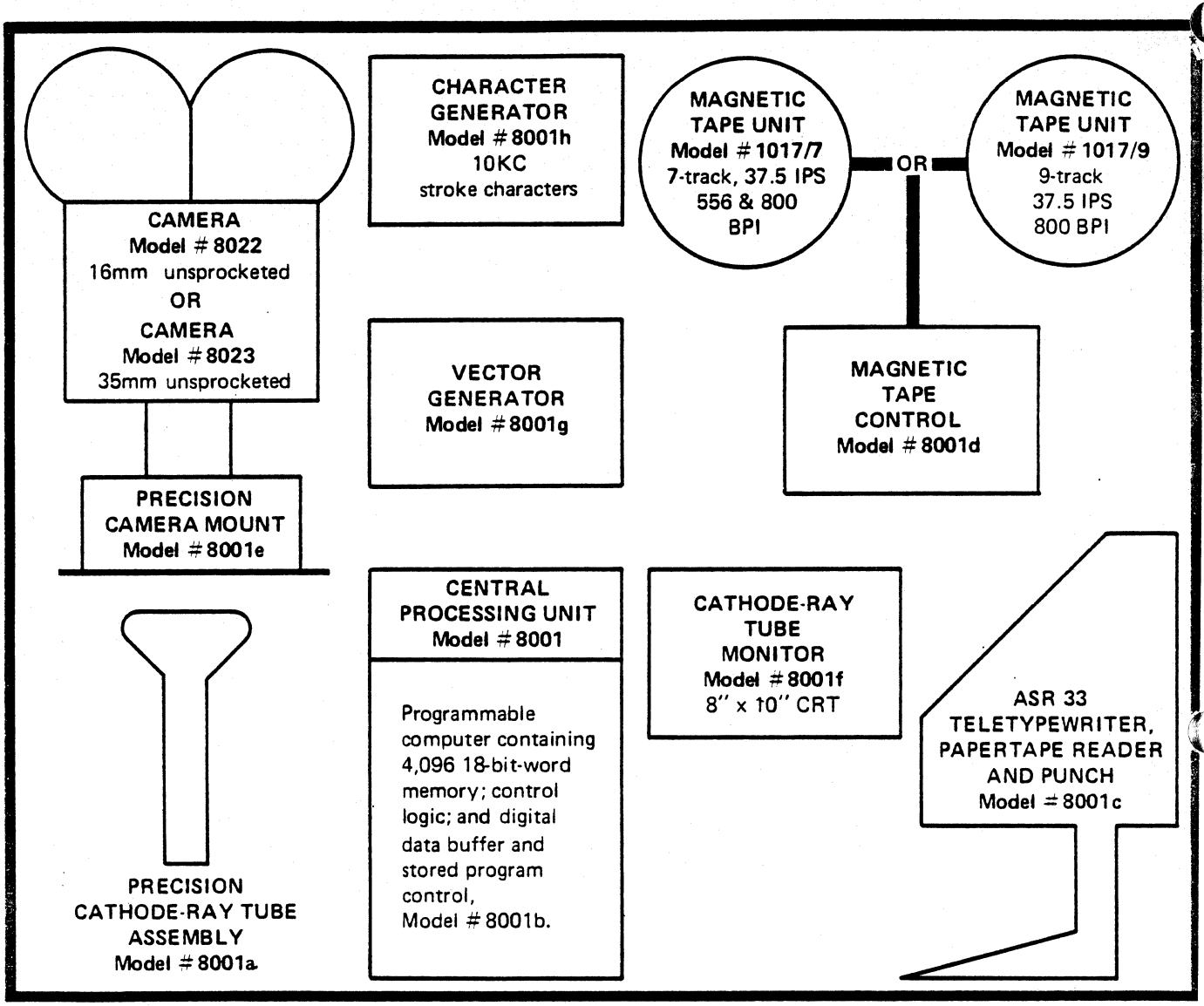

O P T I O N A L F R 8 0 E Q U I P M E N T

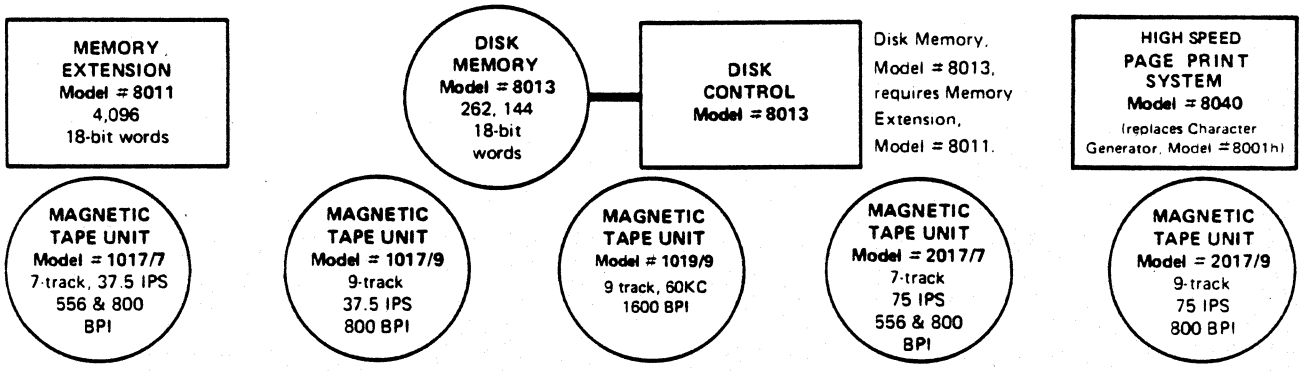

OPTIONAL FR 80 EQUIPMENT *(Continued)*

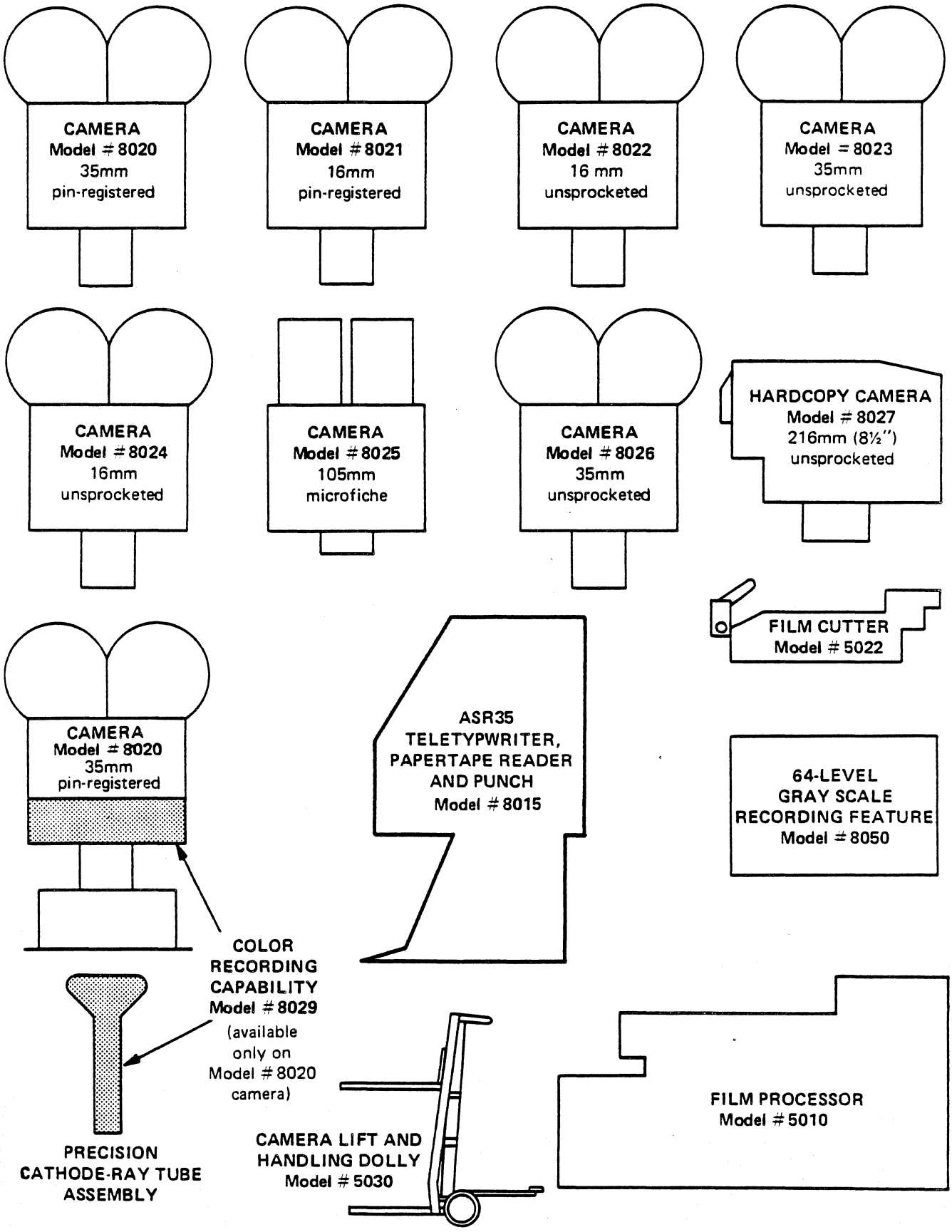

paper tape units serve as a 10-character-per-second auxiliary communications link with the processor unit.

Processor

1.5 The basic binary processor utilizes an 18-bit word and a 4096-word expandable core memory. Serving as the central control unit of the system, the processor combines operating data and plotting instructions for routing to the data translator. Under program control, the processor instructs the data translator to generate the alphanumerics, vectors, and special forms required.

Data Translator

1.6 The high precision and versatility of the FR 80 is determined by the function generators and control circuitry contained in the data translator, which is subdivided into a vector generator, character generator, point plot circuitry, and control circuits for the monitor and recording section. Upon command from the processor, the digital data received by the translator is converted to analog signals that control the precision light source deflection beam. The deflection drive signals are corrected for linearity and appropriate focus. Astigmatism signals are generated and routed to the light source deflection coils. Control signals from the data translator maintain control of the camera and monitor functions.

Recording Unit

1.7 Electrical signals are converted into a recorded film image in the recording unit, which comprises a precision light source, optics, and microfilm camera. Electromagnetic deflection is used to position the light source beam and achieve the best possible image quality. The created image is focused by the optical system and recorded by the microfilm camera. The recording cameras are available with incremental pulldown. The flexibility of the FR 80 permits the addition of Miracode and other retrieval codes to the microfilm record. A display monitor provides the operator with a window into the system. A 10" x 13" cathode-ray display tube is driven in parallel with the precision light source to provide an accurate view of the recorded image.

Chapter 2
FR 80 FEATURES

M A G N E T I C T A P E T R A N S P O R T

2.1 A standard FR 80 includes either a 7-track (556/800 bits per inch -- bpi) or 9-track (800 bpi) magnetic tape transport. These tape drives may be used in any combination up to a total of four, and operate at a speed of 37-1/2 inches per second (ips), providing a maximum transfer rate of 30,000 characters per second (cps) for an 800 bpi drive. Optional tape drives include a 75 ips version of the above two drives, with a maximum data transfer rate of 60,000 cps for an 800 bpi drive.

2.2 A 1600 bpi tape drive is also available for the FR 80. Its speed is 37-1/2 ips, with a maximum data transfer rate of 60,000 cps. It is available as 1600 bpi read/write or dual read 1600 bpi phase encoded/800 NRZI.

2.3 The forenamed magnetic tape drives are IBM tape-compatible. A write feature is standard and is required for each FR 80.

T E L E T Y P E

2.4 The FR 80 utilizes an ASR-33 Teletype for communication with the controller. An optional ASR-35 Teletype is available. The Teletype includes a 10 cps paper tape reader and paper tape punch. High-speed paper tape readers and punches are optionally available. The paper tape reader is used for the bootstrap loader and various other utility routines. When compiling forms on an 8K tape system, both the reader and punch are required.

D I S P L A Y M O N I T O R

2.5 The standard FR 80 contains a 10" x 13" cathode-ray tube display monitor. The monitor is driven by the same deflection system as the recording precision CRT. Therefore, it displays exactly what is being recorded on film. In addition, there is a view-only capability which allows the display to be on the monitor and not on the recording CRT.

2.6 While the system is in the idle status, the current settings of the resident simulator are continuously refreshed on the monitor, which also serves as a display for use in designing forms. The monitor is also very helpful for editing and debugging software, as well as for analyzing magnetic tape records.

F R A M E R O T A T I O N

2.7 The FR 80 can generate either cine or comic mode microfilm in all available cameras. The technique of accomplishing this is unique in that it is done completely through a software mode set in the FR 80. The advantage of this capability is that the CRT is not manually rotated, thus eliminating potential CRT alignment and camera focus problems.

D I S K

2.8 There is provision in the FR 80 for an optional disk drive and controller. The disk is a fixed-head type (nonremovable) with a capacity of 262,144 18-bit words and an average access time of 16 milliseconds. The transfer rate is 3 megabits per second. Uses of the disk include:

1. Storage of programs and forms for rapid loading.
2. Required for the disk operating system versions of the assembler, editor, and debug.
3. Interactive design of forms on-line.

F O R M S O V E R L A Y C A P A B I L I T Y

2.9 A forms overlay capability is standard on the FR 80. Forms are created on the FR 80 through the use of a special software package. A form can be designed and verified by an FR 80 operator with a minimum amount of experience. Forms generation is an integral part of the operator training course. A properly trained operator will require approximately one hour to design a typical computer printout form containing both vectors and characters.

R A S T E R I M A G E S I Z E

2.10 The FR 80 utilizes a 5" precision CRT for the recording of print and plot data. The CRT is optically flat and has a programmable raster of 16,384 by 16,384 points,

for a total of more than a quarter of a billion addressable locations. As part of the deflection circuitry, there is sophisticated correction logic to compensate for geometric distortion common to CRT display systems.

2.11 The image size is continuously variable for all cameras and film sizes up to the maximum image size (see table 2-1 for FR 80 film formats). Image size scaling is done automatically through the use of standard FR 80 software and requires no special training or lens movement on the part of the operator. Exact image size is selected by the operator, scaled by software (including character size selection), and recorded on film. Following are two examples showing the steps in determining the proper scaling.

Plot

2.12 To find the proper image size, use the following formula:

$$\textit{Image Size in inches} \times \textit{Number of scope points per inch} = \textit{Image size in scope points} \qquad (2\text{-}1)$$

Example: A 3/4" grid is to be plotted with the 35mm unsprocketed camera.

$$0.75 \times 11{,}442 = 8582$$

The image size will be set to 8582 scope points.

Print

2.13 To find the proper spacing and line feed values for a given reduction, use the following formulas:

$$\frac{\textit{Number of scope points per inch}}{\textit{Given reduction} \times 10} = \textit{Standard character spacing in scope points} \qquad (2\text{-}2)$$

$$\frac{\textit{Character spacing} \times 5}{3} = \textit{Standard line feed in scope points} \qquad (2\text{-}3)$$

NOTE: "Standard" refers to the normal 10 characters per inch and 6 line feeds per inch on a line printer.

Example: A print tape is to be recorded with the 16mm unsprocketed camera at a 15 times reduction.

$$24{,}510/150 = 163, \text{ and } 815/3 = 272.$$

New page
April 76,
Change
No. 6

TABLE 2-1. COMp 80 AND FR 80 CAMERAS, IMAGES, AND FORMATS.

Operator–Interchangeable Cameras	Model 8020 35mm Sprocketed	Model 8021 16mm Sprocketed	[a]Model 8022 16mm Unsprocketed	[a]Model 8023 35mm Unsprocketed	Model 8024 16mm Unsprocketed	Model 8025 105mm Unsprocketed	[b]Model 8026 35mm Unsprocketed	Model 8028 127mm (5"), 105mm, 70mm Sprocketed or Unsprocketed	Model 8032 105mm Unsprocketed	Model 8060 310mm (12.2") Unsprocketed
Typical Application	Movies and Repro Masters	Movie	Retrieval	Aperture Card	Strip Fiche	24X and 42X Reduction Microfiche	High-Resolution Aperture Card	Large Format Recording	42X and 48X Reduction Microfiche	Full Size Film and Hardcopy Recording
Maximum Image Area	19.0mm x 24.9mm (0.748" x 0.980")	7.6mm x 10.3mm (0.300" x 0.404")	17.0mm x 14.0mm (0.669" x 0.550")	36.4mm x 28.8mm (1.433" x 1.133")	25.4mm x 14.0mm (1.000" x 0.550")	20.0mm x 16.5mm (0.787" x 0.650")	36.4mm x 28.8mm (1.433" x 1.133")	[c]93.8mm x 114.3mm (3.694" x 4.500")	9.0mm x 7.4mm (0.354" x 0.291")	215.9mm x 298.5mm (8.50" x 11.75")
Addressable Points	12,507 x 16,384	7,344 x 9,889	16,384 x 13,467	16,384 x 12,950	16,384 x 9,011	16,384 x 13,517	16,384 x 12,950	[c]13,450 x 16,384	16,384 x 13,470	11,850 x 16,384
Addressable Points Per mm and Per Inch on Film	658/mm (16,718/")	964/mm (24,480/")	964/mm (24,480/")	450/mm (11,430/")	645/mm (16,384/")	819/mm (20,808/")	450/mm (11,430/")	143/mm (3,641/")	1,820/mm (46,282/")	54.9/mm (1,394/")
Advance Increment	[d]4 Perfs 19.00 ± 0.07mm (0.748" ± 0.0025")	[d]1 Perf 7.62 ± 0.03mm (0.300" ± 0.001")	3.00 ± 0.05mm (0.1175" ± 0.002")	8.60 ± 0.05mm (0.3385" ± 0.002")	[e]3.00 ± 0.05mm (0.1175" ± 0.002")	[f]Various	8.60 ± 0.05mm (0.3385" ± 0.002")	0.051mm (0.002")	[f]Various	0.071 ± 0.06mm (0.0028" ± 0.0025")
Frame Advance			11.90 ± 0.13mm (0.470" ± 0.005")	34.4 ± 0.2mm (1.354" ± 0.008")	[e]Various		34.4 ± 0.2mm (1.354" ± 0.008")	925 perforations		215.9 ± 0.15mm (8.50" ± 0.006")

[a] Model 8022 and 8023 are basic cameras. Customer may select either with Basic FR 80 at no extra cost.

[b] Similar to Model 8023, but with increased light efficiency at higher resolution. Compatible with high-resolution, slower-speed films. Capable of up to 80 line pairs per millimeter resolution on reversed AHU-type film.

[c] This is the maximum complete image; it may be extended to 114.5mm x 114.5mm (4.5" x 4.5") with 16,384 x 16,384 addressable points, but image quality will be somewhat degraded in the corners (the Model 8028 camera handles 105mm and 70mm film with a reduced number of addressable points in the image).

[d] Pin-registered film advance.

[e] Operator may select any "effective frame advance" from 0.0mm to 20mm. Film advance speed is equivalent to that of Model 8022.

[f] Operator may select "frame index" (X) or "frame advance" (Y) to generate standard microfiche image spacings on 105mm film.

[g] 118.7mm ± 0.025mm (4.675" ± 0.001"); the tolerance is relative to the perforations and does not include film manufacturing tolerances.

The character spacing and line feed values will be set to 163 and 272 scope points, respectively.

F R A M E B U T T I N G

2.14 Frame butting accuracy is a function of camera pulldown accuracy. Unperforated cameras operate with roller pulldown, which can produce a slight variation from frame-to-frame. Normally, this is adequate for data recording purposes.

2.15 An optional, sprocketed, pin-registered camera provides accurate frame butting. The camera specification calls for a pulldown accuracy of ±0.0004". This is better than the tolerances for positioning the sprocket holes in the film!

V E C T O R G E N E R A T O R

2.16 The standard FR 80 draws vectors through the use of a vector generator rather than by point plotting. Under program control, vectors can be drawn between any two addressable points at any one of eight line widths and eight levels of intensity.

C O L O R R E C O R D I N G

2.17 Color recording is available on the FR 80 as an option. The option requires that a special color-recording CRT be substituted for the standard black-and-white CRT. (The color CRT can be used for normal black-and-white recording, but a slight loss in resolution will be evident.) The color CRT phosphor has a spectral light output that will expose all three layers of the color film.

2.18 Physically, the color unit has three color filters: red, green, and blue. Under program control, the proper filter is inserted into the optical path. A standard FR 80 subroutine controls filter movement. Each selective filter allows exposure of only the corresponding layer of the color film. The following paragraphs indicate the number of hits (repeats of the same data) required to produce different colors.

Up to Four Colors

2.19

White = 1 red hit, 1 green hit, 1 blue hit
Blue = 1 blue
Green = 1 green
Red = 1 red

Up to Seven Colors

2.20

White	= 1 red hit, 1 green hit, 1 blue hit
Blue	= 1 blue
Blue/green	= 1 blue, 1 green
Green	= 1 green
Yellow	= 1 green, 1 red
Red	= 1 red
Violet	= 1 red, 1 blue

Up to Thirteen Colors

2.21

White	= 2 red hits, 2 blue hits, 2 green hits
Blue	= 2 blue
Blue/blue-green	= 2 blue, 1 green
Blue/green	= 2 blue, 2 green
Blue/green-green	= 1 blue, 2 green
Green	= 2 green
Yellow/green	= 2 green, 1 red
Yellow	= 2 green, 2 red
Orange	= 1 green, 2 red
Red	= 2 red
Violet	= 2 red, 2 blue
Red/violet	= 2 red, 1 blue
Blue/violet	= 1 red, 2 blue

2.22

The data tape need only specify the color required; standard FR 80 software keeps track of the filters and the number of hits. Throughput is increased by organizing the input data so that all of each color is recorded at the same time.

C H A R A C T E R S

2.23 The FR 80 has extreme flexibility in hardware character generation. Rather than use a hard-wired character set, which limits recording to a single fixed font, the FR 80 stores the character set in core. Consecutive jobs can use different character sets and even different fonts without any alteration to the FR 80.

2.24 By using a very compact notation, the FR 80 standard 128-character set requires approximately 800 words of core. The core required for each FR 80 program includes space for the character set.

2.25 The standard character generator "cycle steals" the compacted character representation from core, interprets and records the character, and spaces in preparation for the next character. The high-speed character generator, part of the optional high-speed page composition system, incorporates the "bookkeeping" functions into the hardware. That is, a "pointer" to the beginning of a print line is handed to the character generator, and the entire print line is recorded before interrupting the program. The program can be doing other work while the print line is being recorded.

C h a r a c t e r F o n t s

2.26 The FR 80 has three standard fonts: III, OCR-B, and NMA Microfont, and an optional directory font (see chap. 7 for character codes). III has designed over 200 basic characters and symbols. A reasonable number of special characters can be incorporated into FR 80 programs for special applications, e.g., logic diagrams from line printer output.

C h a r a c t e r S i z e

2.27 The FR 80 character generator records 64 character sizes. Table 2-2 shows the character height for each size. Since the three standard fonts have an aspect ratio of 10 x 14, the normal character spacing is equal to the character height. In fact, when size is not specified, the FR 80 software will automatically choose the proper character size based on the character spacing.

TABLE 2-2. NOMINAL FR 80 CHARACTER HEIGHT IN SCOPE POINTS. *

[The term "scope points" refers to the addressable raster, i.e., there are 16,384 scope points across the full CRT image in each direction]

Character size	Height in scope points
0	12.6
1	16.8
2	21
3	25.2
4	29.4
5	33.6
6	37.8
7	42
8	46.2
9	50.4
10	54.6
11	58.8
12	63
13	67.2
14	71.4
15	75.6
16	79.8
17	84
18	88.2
19	92.4
20	96.6
21	100.8
22	105
23	109.2
24	113.4
25	117.6
26	121.8
27	126
28	130.2
29	134.4
30	138.6
31	142.8

Character size	Height in scope points
32	147
33	151.2
34	155.4
35	159.6
36	163.8
37	168
38	172.2
39	176.4
40	180.6
41	184.8
42	189
43	193.2
44	197.4
45	201.6
46	205.8
47	210
48	214.2
49	218.4
50	222.6
51	226.8
52	231
53	235.2
54	239.4
55	243.6
56	247.8
57	252
58	256.2
59	260.4
60	264.6
61	268.8
62	273
63	277.2

*Characters are assumed to be 14 strokes high.

Character Rotation

2.28 The character generator automatically rotates characters to one of eight possible rotations. The rotations are at 45° intervals beginning at 0°.

Character Speed

2.29 The standard character generator produces 10,000 characters per second at minimum size. Typical speeds for common reductions are 5000 to 8000 characters per second. An optional high-speed page print system records at rates approaching 40,000 characters per second. The actual throughput speed is controlled by character size, mix of characters, fonts, style, tape blocking factor, multiple buffering, film pulldown, etc.

GRAY LEVEL RECORDING

2.30 Eight levels of gray are standard on the FR 80. A 64-level gray scale recording feature is optionally available.

HIGH-SPEED PAGE PRINT SYSTEM

2.31 This option permits character rates up to 40,000 characters per second and allows selection of CRT beam velocity under program control.

Chapter 3
APPLICATIONS SOFTWARE

H O S T C O M P U T E R S O F T W A R E

3.1 III makes available to FR 80 users the symbolics and user manuals for several of the more common host computer software systems. Upon receipt of a 2400-foot magnetic tape, III will copy the symbolics on magnetic tape and furnish a set of user manuals free of charge.

3.2 These systems are the current production systems of the companies furnishing them for distribution and should be relatively error-free; however, neither the contributing company nor III can assume any liability for their use.

S C 4 0 2 0 R o u t i n e s

3.3 Developed by North American Rockwell Corporation, these routines are written in FORTRAN with some 360 assembly language. The current version is operating under OS/MVT. Output is a tape formatted for the SC 4020. The III FR 80 reads this tape directly.

F R E S C O

3.4 This is a host computer package particularly suited for use in an installation where the users are familiar with the SC 4020 syntax and do not want to reeducate a large group of "open shop" users. FRESCO (an acronym for FR 80 Extensions to SC 4020 Operations) was also developed by North American Rockwell and is an expansion of their SC 4020 routines package to take advantage of the additional features of the FR 80. Written in FORTRAN with some 360 assembly language, it is implemented under OS/MVT. The output of FRESCO is in the FR 80 data format. FRESCO is provided through the courtesy of North American Rockwell Corporation.

I G S (I n t e g r a t e d G r a p h i c s S y s t e m)

3.5 Developed by the RAND Corporation, IGS was designed to provide a universal higher level language that would produce tapes for recording on any graphics recorder. Through the courtesy of the RAND Corporation, III is

able to provide a version of IGS tailored to produce META output for the SC 4060. This same package can be modified by the user to provide a more efficient META output with extended features for the FR 80.

3D Plots

3.6 Through the courtesy of Aerojet Nuclear Company, Aerojet-General Corporation, III may also distribute listings of routines for producing 3D plots. The routines are written in FORTRAN.

Other Host Computer Software

3.7 Additional host computer software packages of general interest will be distributed to FR 80 users if the contributor will furnish III with a magnetic tape with the the symbolics and a master copy of the user's manual. III will also furnish technical assistance to FR 80 users who would like to convert their host computer systems to FR 80 data format output. Such conversion has resulted in significant reductions in host computer processing time, higher information density on the output magnetic tape and, in many cases, substantially increased recording speed.

STANDARD FR 80 SOFTWARE

3.8 III has applied the philosophy of maximum flexibility to FR 80 applications software. Each of the simulators has features often not available in the equipment being simulated. The following paragraphs detail the features available for each simulator. This is accomplished by first showing a sample of the parameter list for an actual program, followed by a brief description of each feature. It is not necessary for an "open shop" user to know how these are entered in the FR 80; these are operator functions and are covered in the *FR 80 Operator's Manual*.

Print Simulators

3.9 The FR 80 can simulate most line printers in common use. The simulators are designed to accept virtually any print format. This is important since no modification of host computer software is required. There are no artificial limitations on the number of characters in a line, or the number of lines in a page, or the number of pages in a frame.

3.10 *Sample Commands & Parameters for Payroll Print Program.*

```
TITLE
END JOB
FORM=PAYROLL INDEX
OVERALL FORM=NO
ERROR FORM=NO
IMAGES/FICHE=16,14
CAMERA=6
PULLDOWN=8
STRIP FICHE=NO
BY ROWS=NO
BY COLUMNS=YES
LOAD=PAYROLL
SPOT SIZE=Ø,1,2,3,4,5,6,7
INTENSITY=Ø,1,2,3,4,5,6,7
DELTA SIZE=Ø
VARIABLE BLOCKING=NO
FIXED BLOCKING=325
OTHER CONTROL CODES=NO
SCIENTIFIC=NO
COMMERCIAL=YES
WHERE CHANNELS ARE=1,1/2,1/3,1/4,1/5,1/6,1/7,1/8,1/9,1/1Ø,
                   1/11,1/12,1
EQUIVALENCE CODE
ASA CONTROLS=NO
14Ø1 CONTROLS=NO
36Ø CONTROLS=YES
POSITION OF CONTROL=1
SINGLE SPACE=YES
DOUBLE SPACE=NO
TRIPLE SPACE=NO
↑ - UPRIGHT=YES
← - ROTATED=NO
LINE SIZE=134
IGNORE - BEG,END,BLOCK=1,Ø,Ø
X - #,STEP,LEFT=1,7175,Ø
PAGE SIZE=64
Y - #,STEP,TOP=1,12646,14514
CHARACTERS - SIZE,SPACE,FEED=8,5Ø,83
```

3.11 *Description of Print Simulator Commands in Par. 3.10.*

TITLE END JOB	Specifies FR 80 fiche titling capability.
FORM=	One or more forms can be used.
OVERALL FORM=	Form recorded once per frame rather than once per page.
ERROR FORM=	Form flashes when a permanent data error occurs in print.

IMAGES/FICHE=	Specifies number of columns and rows per fiche.
CAMERA=	Specifies choice of camera.
PULLDOWN=	Number of camera advance increments for one frame.
STRIP FICHE=	Indicates strip fiche setting for any frame advance distance other than the standard for the camera.
BY ROWS= BY COLUMNS=	Indicates sequence of pages within a single frame.
LOAD=	Name of program.
SPOT SIZE= INTENSITY=	Ability to specify user's choice of spot size and intensity without having to create a new data tape.
DELTA SIZE=	Ability to increase or decrease all character sizes by the same factor.
VARIABLE BLOCKING= FIXED BLOCKING=	Specifies size of record blocking on data tape.
OTHER CONTROL CODES=	Specifies nonstandard print controls (see chap. 6).
SCIENTIFIC= COMMERCIAL=	Choice of character sets.
NO CARRIAGE CONTROLS=	Specifies no use of carriage controls.
WHERE CHANNELS ARE=	Flexibility in specifying channel skips.
EQUIVALENCE CODE	Utility to have a character code represent another character.
ASA CONTROLS= 1401 CONTROLS= 360 CONTROLS=	Specifies standard carriage controls (see chap. 6).
POSITION OF CONTROL=	Specifies location of control character in the data record.
SINGLE SPACE= DOUBLE SPACE= TRIPLE SPACE=	Specifies line spacing over and above what is on the data tape.
↑ UPRIGHT= ← ROTATED=	Comic or cine mode.
LINE SIZE=	Number of characters to a line.

IGNORE - BEG,END,BLOCK=	Ability to omit portions of the print line.
X-#,STEP,LEFT= Y-#,STEP,TOP=	Capability for specifying n pages per frame and boundaries.
PAGE SIZE=	Number of lines to a page.
CHARACTERS - SIZE,SPARE,FEED=	Specifies character size, character spacing and line feed.

S C 4 0 2 0 S i m u l a t o r

3.12 The 4020 simulator allows the FR 80 to accept magnetic tapes formatted for the Stromberg DatagraphiX 4020.

3.13 *Sample Commands & Parameters for Strip Chart Program.*

```
FORM=Ø
OVERALL FORM=Ø
CAMERA=3
BY ROWS=YES
BY COLUMNS=NO
LOAD=CHART
SPOT SIZE=Ø,1,2,3,4,5,6,7
INTENSITY=Ø,1,2,3,4,5,6,7
DELTA SIZE=Ø
↑ - UPRIGHT=NO
← - ROTATED=YES
SET SIZE,PULLDOWN=11ØØØ,3
X - NUMBER UP=1
Y - NUMBER UP=1
ABUT - SIZE,PULLDOWN=12Ø85,3
HEAVY - INTENSITY,SPOT=7,Ø
LIGHT - INTENSITY,SPOT=6,Ø
VECTORS - INTENSITY,SPOT=7,Ø
AXES - INTENSITY,SPOT=7,Ø
CHARACTER SIZE=15
```

3.14 *Description of SC 4020 Simulator Commands in Par. 3.13.*

FORM=	One form can be used.
OVERALL FORM=	Form recorded once per frame rather than once per page.
CAMERA=	Specifies choice of camera.
BY ROWS= BY COLUMNS=	Indicates sequence of pages within a single frame.
LOAD=	Name of program.

SPOT SIZE= INTENSITY=	Ability to specify user's choice of spot size and intensity without having to create a new data tape.
DELTA SIZE=	Ability to increase or decrease all character sizes by the same factor.
↑ - UPRIGHT= ← - ROTATED=	Comic or cine mode.
SET SIZE,PULLDOWN=	Permits scaling the recorded image to any size within the maximum image area without preparing a new data tape. Camera incremental pulldown is also specified.
X - NUMBER UP= Y - NUMBER UP=	Specifies number of plots to a frame.
ABUT - SIZE,PULLDOWN=	Permits scaling the expanded (abutted) recorded image to match the camera pulldown specified.
HEAVY - INTENSITY,SPOT= LIGHT - INTENSITY,SPOT= VECTORS - INTENSITY,SPOT= AXES - INTENSITY,SPOT=	Permits choice of spot sizes and intensities to allow more flexibility.
CHARACTER SIZE=	Informs you of the choice of character size for standard 4020 characters made by the program.

M E T A I n t e r p r e t e r

3.15 The META interpreter accepts tape in the META format and in particular for the Stromberg DatagraphiX 4060.

3.16 *Sample of Commands & Parameters for Stock Chart Program.*

```
FORM=NO
OVERALL FORM=NO
CAMERA=1
LOAD=STOCKS
SPOT SIZE=Ø,1,2,3,4,5,6,7
INTENSITY=Ø,1,2,3,4,5,6,7
DELTA SIZE=Ø
↑ - UPRIGHT=YES
← - ROTATED=NO
SET SIZE,PULLDOWN=8192,3
ABUT - SIZE,PULLDOWN=12ØØØ,3
```

3.17 *Description of META Interpreter Commands in Par. 3.16.*

FORM=	One form can be used.
OVERALL FORM=	Form recorded once per frame rather than once per page.
CAMERA=	Specifies choice of camera.
LOAD=	Name of program.
SPOT SIZE= INTENSITY=	Ability to specify user's choice of spot size and intensity without having to create a new data tape.
DELTA SIZE=	Ability to increase or decrease all character sizes by the same factor.
↑ - UPRIGHT= ← - ROTATED=	Comic or cine mode.
SET SIZE,PULLDOWN=	Permits scaling the recorded image to any size within the maximum image area without preparing a new data tape. Camera incremental pulldown is also specified.
ABUT - SIZE,PULLDOWN=	Permits scaling the expanded (abutted) recorded image to match the camera pulldown specified.

CalComp Simulator

3.18 Records tapes formatted for the 500, 600, and 700 CalComp plotters.

3.19 *Sample of Commands & Parameters for Contour Map Program.*

```
CAMERA=1
PULLDOWN=6
LOAD=CONTOUR
ABUT - SIZE,PULLDOWN=16383,3
SCALE - C,F=2,1
INITIAL X,Y,=Ø,2ØØØ
LEFT=Ø
BOTTOM=1868
← - ROTATED
↑ - UPRIGHT
```

3.20 *Description of CalComp Simulator Commands in Par. 3.19.*

CAMERA=	Specifies choice of camera.
PULLDOWN=	Number of camera advance increments for one frame.
LOAD=	Name of program.
ABUT - SIZE,PULLDOWN=	Permits scaling the expanded (abutted) recorded image to match the camera pulldown specified.
SCALE - C,F=	Specifies scaling from CalComp to FR 80 units.
INITIAL X,Y=	Specifies starting coordinates.
LEFT= BOTTOM=	Specifies frame positioning.
← - ROTATED ↑ - UPRIGHT	Comic or cine mode.

F O R M S C O M P I L E R

3.21 The FR 80 has a forms recording capability. Instead of using a manufactured forms slide and flashing it onto film, the FR 80 stores forms in core for read-out and recording as required by the film recording program. Since the forms are recorded from the CRT, using the same digitally controlled deflection system, precise registration and scaling are assured. This method makes it possible to place a vertical line between two adjacent characters without touching the characters or losing print positions.

3.22 Multiple forms (up to six) can be randomly selected under program control. The number of forms available at a given time is a function of the memory capacity of the system and the type of program.

3.23 Because the forms are recorded using the character and vector generator, the same intensity and resolution as the data is assured. However, intensities and line widths of specific lines and/or characters can be varied if desired.

3.24 Software for compiling forms is supplied with an 8K FR 80. This software language is easily learned. For a description of the form design language and a sample form, see chapter 8.

F R 8 0 D A T A F O R M A T

3.25 Many FR 80 users would like to format their output magnetic tapes more efficiently. This often provides greater flexibility and substantially reduces host computer time. The FR 80 Standard Data Format is presented in chapter 9. For those users desiring to implement the format, III will provide technical advice.

Chapter 4

FR 80 OUTPUT

C A M E R A S

4.1 The FR 80 is equipped with a standard precision camera mount that fits a large selection of optional cameras, thus providing broad flexibility for film recording requirements (see table 2-1 for FR 80 camera options and film formats).

M o d e l 8 0 2 0 3 5 m m S p r o c k e t e d C a m e r a

4.2 *(For Movies, Reproduction Masters, and Strip Charts.)* This camera has a sprocketed, pin-registered movement and is ideal for producing computer animated movies as well as reproduction masters. The pin-registration also makes the camera useful for making accurate abutments for strip charting.

M o d e l 8 0 2 1 1 6 m m S p r o c k e t e d C a m e r a

4.3 *(For Movies.)* With its sprocketed, pin-registered movement, this camera is very good for computer animation. This is the camera's primary use, since its small image size gives it limited appeal for precision plotting or abutting.

M o d e l 8 0 2 2 1 6 m m U n s p r o c k e t e d C a m e r a

4.4 *(For Retrieval, Plotting, and Printing.)* Before the introduction of the fiche camera, this was the basic camera for alphanumeric data storage and retrieval systems. To take maximum advantage of the FR 80's high resolution, some users also specify this camera for plotting as well as printing.

M o d e l 8 0 2 3 3 5 m m U n s p r o c k e t e d C a m e r a

4.5 *(For Aperture Cards and Offset Printing Plates.)* This is an unsprocketed camera with a maximum image area for recording plot data. The format is adaptable for mounting in aperture cards. This camera is also used to record film for making offset printing plates.

Model 8024 16mm Unsprocketed Camera

4.6 *(For Strip Fiche.)* This is basically the same camera as the Model 8022 except that it has a larger image area. It is used to record double-page formats at 24X and is able to space frames at the 0.25mm increments common in fiche formats.

Model 8025 105mm Unsprocketed Camera

4.7 *(For Microfiche.)* The Model 8025 camera normally records in columns, but the row format can be used at a sacrifice in recording time and positioning accuracy. The camera has standard 24X and 42X format control disks. Other formats and reductions are accommodated through standard FR 80 software. The camera aperture permits the recording of a double-page (20mm) image at 24X. An optional adapter kit is available for converting the camera to 16mm; however, the use of 16mm film in this camera is subject to certain limitations, and the user may find that it is better to use a separate 16mm camera.

4.8 Fiche titling is accomplished with standard FR 80 software (see par. 4.14).

Model 8026 35mm Unsprocketed Camera

4.9 *(For High-Resolution Aperture Cards and Offset Printing Plates.)* A specially designed lens system and mounting make this the best camera for quality recording. Its popularity for engineering drawing aperture card systems is based on its ability to record "AHU" type film at standard speeds. The high resolution permits the recording of E-size drawings (34" x 44") at 30X, and the fifth generation reproduction is quite clear.

4.10 Another important application is in recording 35mm frames with one or more pages per frame on high-resolution film from which high-quality metal and paper plates are produced for normal offset printing requirements.

FILM FORMATS

Microfiche

4.11 The FR 80 is capable of generating microfiche in the standard formats shown in table 4-1. Specification sheets for several of these formats are shown on pages 26 & 27.

TABLE 4-1. FR 80 MICROFICHE FORMATS.

Format designation	Reduction ratio	Images per fiche (without titles)	Original document size (inches)
NMA A1	24X	112	8-1/2 x 11
NMA A3	24X	72	14 x 11
III	24X	56	17 x 11
NMA A4	42X	350	8-1/2 x 11
NMA A5	42X	224	14 x 11
III	42X	168	17 x 11
III	48X	448	8-1/2 x 11
III	48X	288	14 x 11
III	48X	224	17 x 11

4.12 At a reduction ratio of 42X, the system is capable of generating 192 frames (computer printout page) on each 4" x 6" microfiche, with sufficient room for titling across the top of the fiche. Pages are arranged in a 14 x 16 array using the top two rows of 32 pages as area for titling. At a reduction of 48X, 392 frames and titling (8-1/2" x 11" document) can be generated on each microfiche.

4.13 The microfiche camera on the FR 80 is currently capable of generating a pattern of sequential images in sequential columns. Selection of the specific format desired is under computer control.

Fiche Titling Format

4.14 For a detailed description of the FR 80 fiche titling format, see page 46.

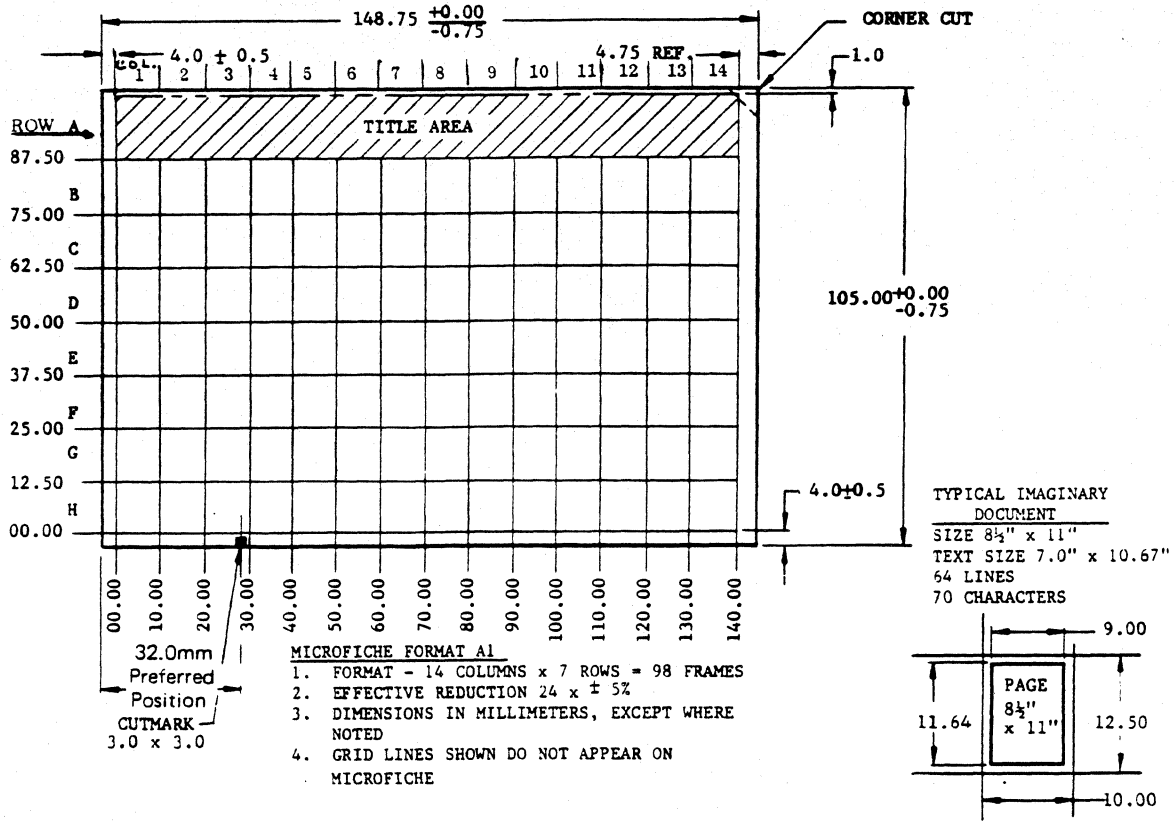

MICROFICHE FORMAT A1

1. FORMAT - 14 COLUMNS x 7 ROWS = 98 FRAMES
2. EFFECTIVE REDUCTION 24 x ± 5%
3. DIMENSIONS IN MILLIMETERS, EXCEPT WHERE NOTED
4. GRID LINES SHOWN DO NOT APPEAR ON MICROFICHE

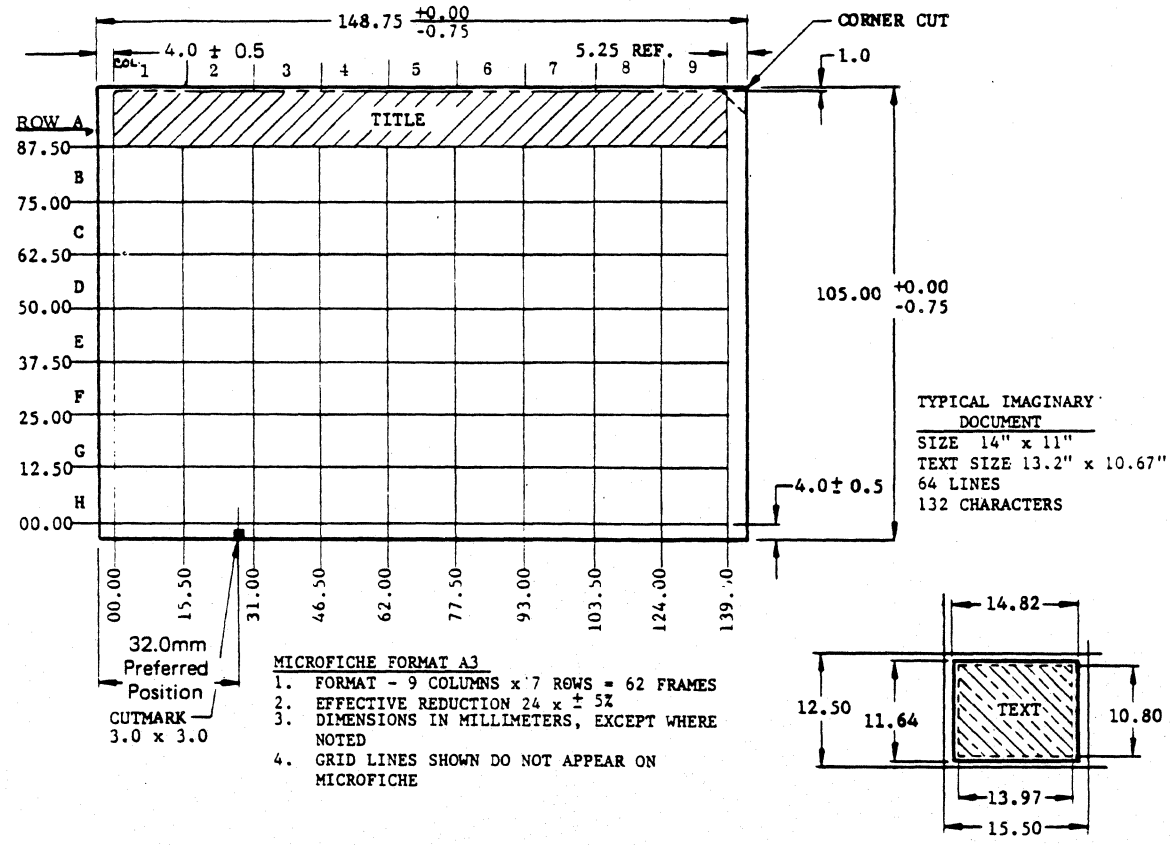

MICROFICHE FORMAT A3

1. FORMAT - 9 COLUMNS x 7 ROWS = 62 FRAMES
2. EFFECTIVE REDUCTION 24 x ± 5%
3. DIMENSIONS IN MILLIMETERS, EXCEPT WHERE NOTED
4. GRID LINES SHOWN DO NOT APPEAR ON MICROFICHE

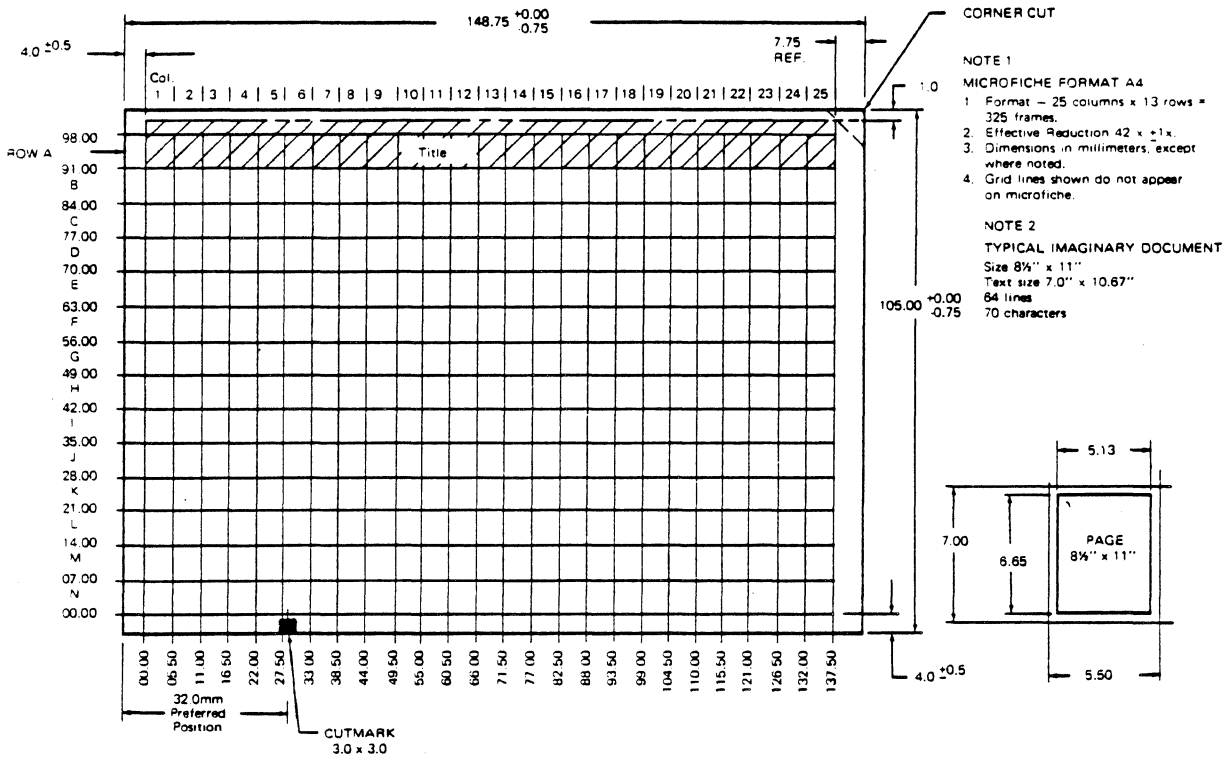
148.75 +0.00 -0.75
CORNER CUT
4.0 ±0.5
7.75 REF.
1.0
Col. 1 2 3 4 5 6 7 8 9 10 11 12 13 14 15 16 17 18 19 20 21 22 23 24 25
ROW A
98.00
Title
91.00 B
84.00 C
77.00 D
70.00 E
63.00 F
56.00 G
49.00 H
42.00 I
35.00 J
28.00 K
21.00 L
14.00 M
07.00 N
00.00
105.00 +0.00 -0.75
00.00 06.50 11.00 16.50 22.00 27.50 33.00 38.50 44.00 49.50 55.00 60.50 66.00 71.50 77.00 82.50 88.00 93.50 99.00 104.50 110.00 115.50 121.00 126.50 132.00 137.50
4.0 ±0.5
32.0mm Preferred Position
CUTMARK 3.0 x 3.0
NOTE 1
MICROFICHE FORMAT A4
1. Format – 25 columns x 13 rows = 325 frames.
2. Effective Reduction 42 x ±1x.
3. Dimensions in millimeters, except where noted.
4. Grid lines shown do not appear on microfiche.
NOTE 2
TYPICAL IMAGINARY DOCUMENT
Size 8½" x 11"
Text size 7.0" x 10.67"
64 lines
70 characters
5.13
7.00
6.65
PAGE 8½" x 11"
5.50

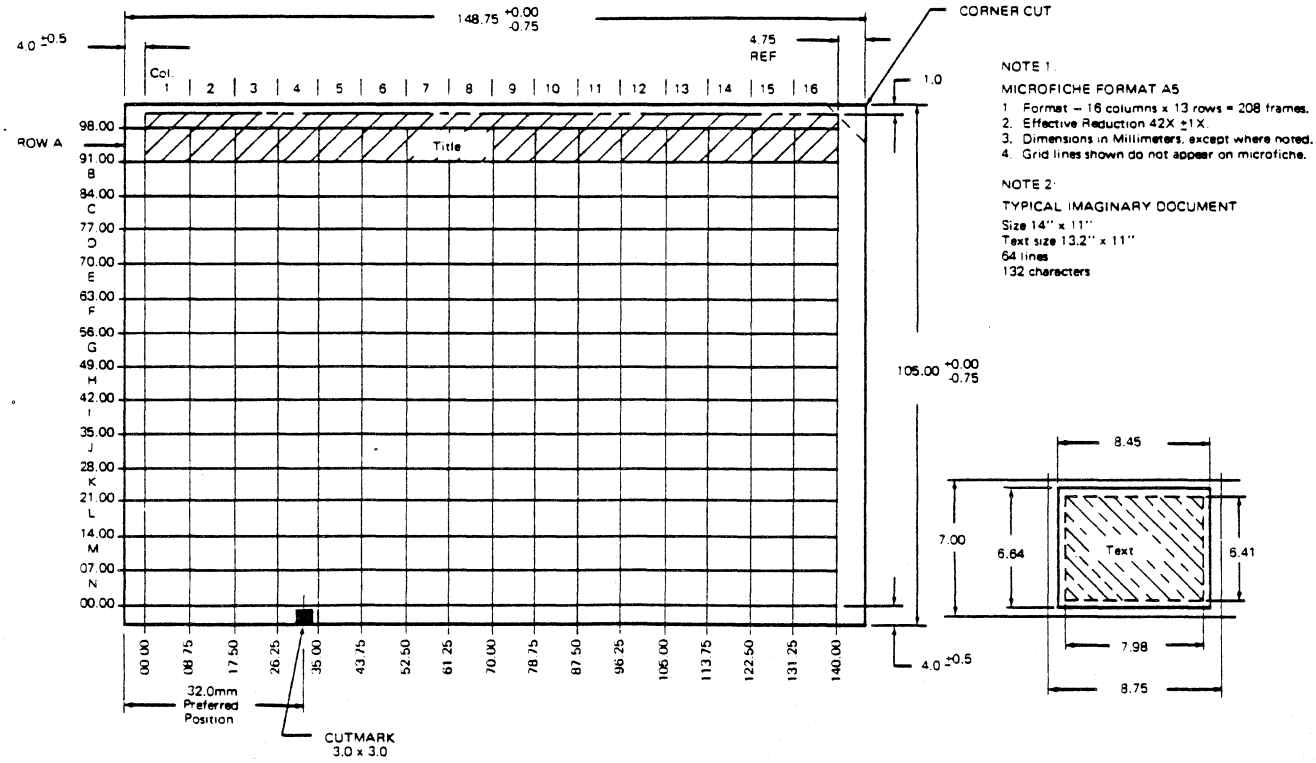
148.75 +0.00 -0.75
CORNER CUT
4.0 ±0.5
4.75 REF
1.0
Col. 1 2 3 4 5 6 7 8 9 10 11 12 13 14 15 16
ROW A
98.00
Title
91.00 B
84.00 C
77.00 D
70.00 E
63.00 F
56.00 G
49.00 H
42.00 I
35.00 J
28.00 K
21.00 L
14.00 M
07.00 N
00.00
105.00 +0.00 -0.75
00.00 08.75 17.50 26.25 35.00 43.75 52.50 61.25 70.00 78.75 87.50 96.25 105.00 113.75 122.50 131.25 140.00
4.0 ±0.5
32.0mm Preferred Position
CUTMARK 3.0 x 3.0
NOTE 1
MICROFICHE FORMAT A5
1. Format – 16 columns x 13 rows = 208 frames.
2. Effective Reduction 42X ±1X.
3. Dimensions in Millimeters, except where noted.
4. Grid lines shown do not appear on microfiche.
NOTE 2
TYPICAL IMAGINARY DOCUMENT
Size 14" x 11"
Text size 13.2" x 11"
64 lines
132 characters
8.45
7.00
6.64
Text
6.41
7.98
8.75

Roll Film

4.15 The diagrams on pages 29 through 35 show the formats for 16mm, 35mm, and 105mm film produced by the FR 80.

TYPES OF OUTPUT

4.16 COM film is exposed by the CRT drawing a line. Any area not touched by light from the beam remains unexposed. Normal film processing produces an image with black lines on a clear background. This is called positive microfilm. Standard microfilm produced by photographing such items as typed pages or an engineering drawing has clear lines with a black background and is called negative microfilm.

4.17 Negative film is generally used for viewing and making enlarged paper prints or offset masters. Duplication on Diazo film produces the same negative image. The black background reduces problems of undesirable dust and dirt marks.

4.18 It is often desirable to make the COM output negative microfilm. This can be accomplished by reversal processing the film in a unit such as the Information International Model 5010 Film Processor. The image will then have clear lines on a black background.

4.19 A second method of obtaining negative appearing images is to duplicate the normal COM output (positive) with a vesicular film such as that made by Kalvar and Xidex. The copy will be negative.

4.20 When a duplicate is needed and the image polarity is to be the same as the original, reproducing should be made by using Diazo film.

4.21 Many viewer-printers are available for making hardcopy from microfilm. For high-volume single copies from roll film, a machine like the Xerox Copyflo is appropriate.

4.22 FR 80 output film can be run on various platemakers to produce paper or metal plates for various printing presses.

FILM FORMAT FOR MODEL 8020 35MM SPROCKETED CAMERA

1. FILM SPECIFICATION: ANSI #PH22.34 (BH-1870)

2. MAXIMUM IMAGE:

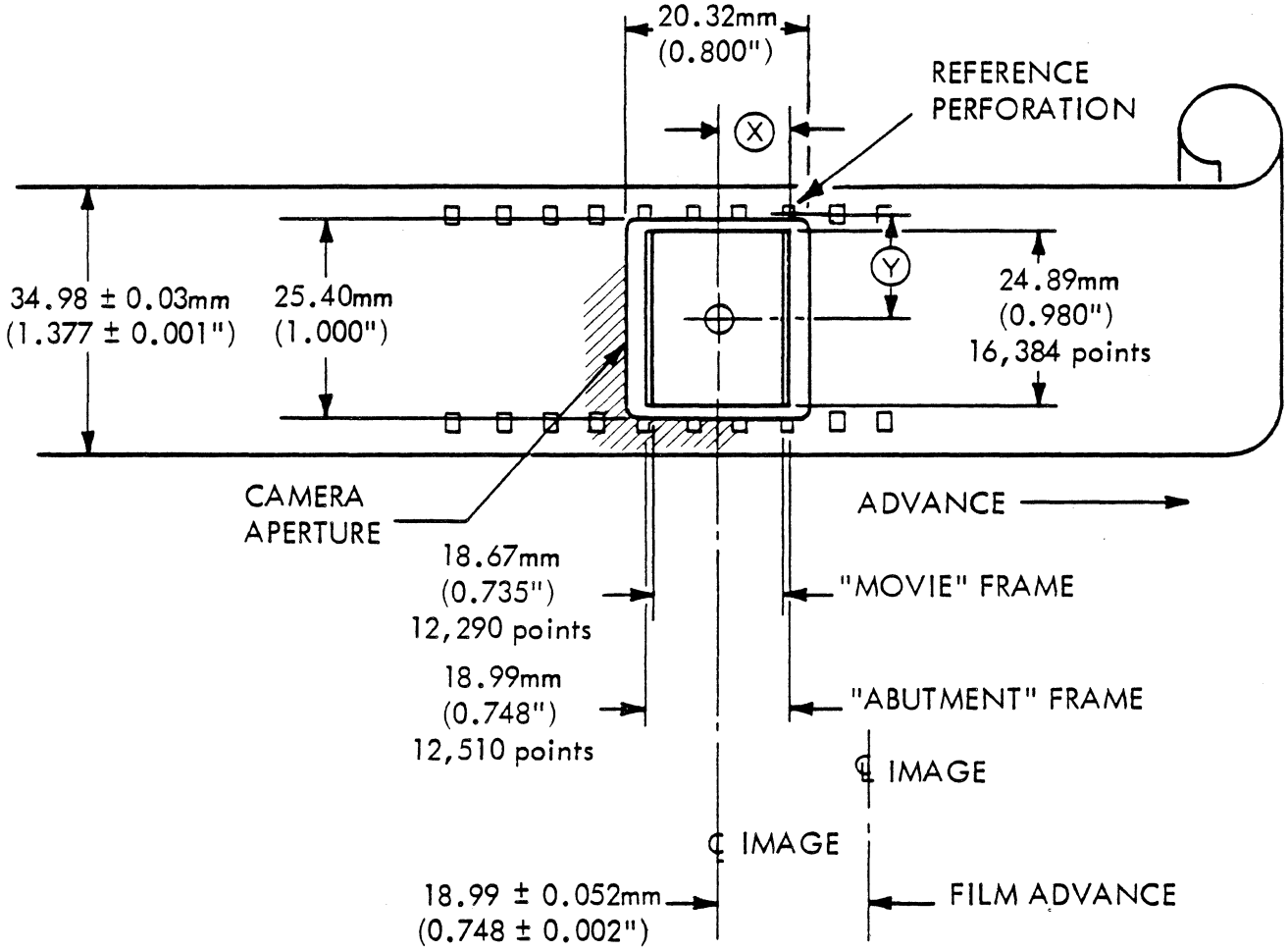

(X) CENTER OF IMAGE TO CENTER OF REFERENCE PERFORATION: 11.88 ± 0.08mm (0.468 ± 0.003") REPEATABLE WITHIN ±0.01mm (±0.0004").

(Y) CENTER OF IMAGE TO CENTER OF REFERENCE PERFORATION: 14.083 ± 0.13mm (0.554 ± 0.005") REPEATABLE WITHIN ±0.01mm (±0.0004").

3. ADDRESSABLE POINTS ON FILM: 658/mm (16,722/inch).

FILM FORMAT FOR MODEL 8021 16MM SPROCKETED CAMERA

1. FILM SPECIFICATION: ANSI #PH22.5 (2R-3000);
   ANSI #PH22.7, IMAGE AREA
2. MAXIMUM IMAGE:

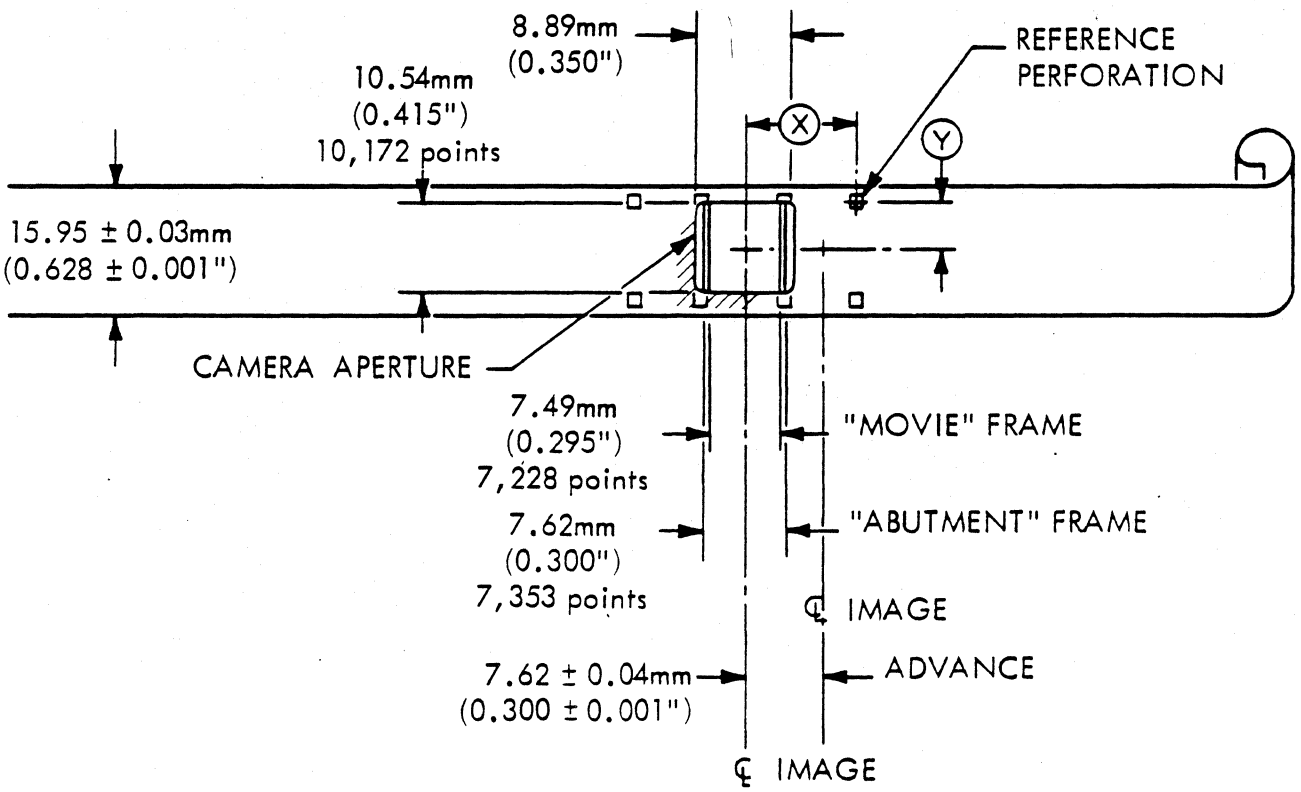

(X) CENTER OF IMAGE TO CENTER OF REFERENCE PERFORATION: 11.43 ± 0.06mm (0.4500 ± 0.0025") REPEATABLE WITHIN ±0.01mm (±0.0004").

(Y) CENTER OF IMAGE TO CENTER OF REFERENCE PERFORATION: 6.16 ± 0.13mm (0.2425 ± 0.005") REPEATABLE WITHIN ±0.01mm (±0.0004").

3. ADDRESSABLE POINTS ON FILM: 965/mm (24,510/inch).

FILM FORMAT FOR MODEL 8022 16MM UNSPROCKETED CAMERA

1. FILM SPECIFICATION: NMAS #MS2-71, ANSI #PH5.3 (REFERS TO #PH22.5-53 DOUBLE PERFORATION AND PH12.5-53 SINGLE PERFORATION)

2. MAXIMUM IMAGE:

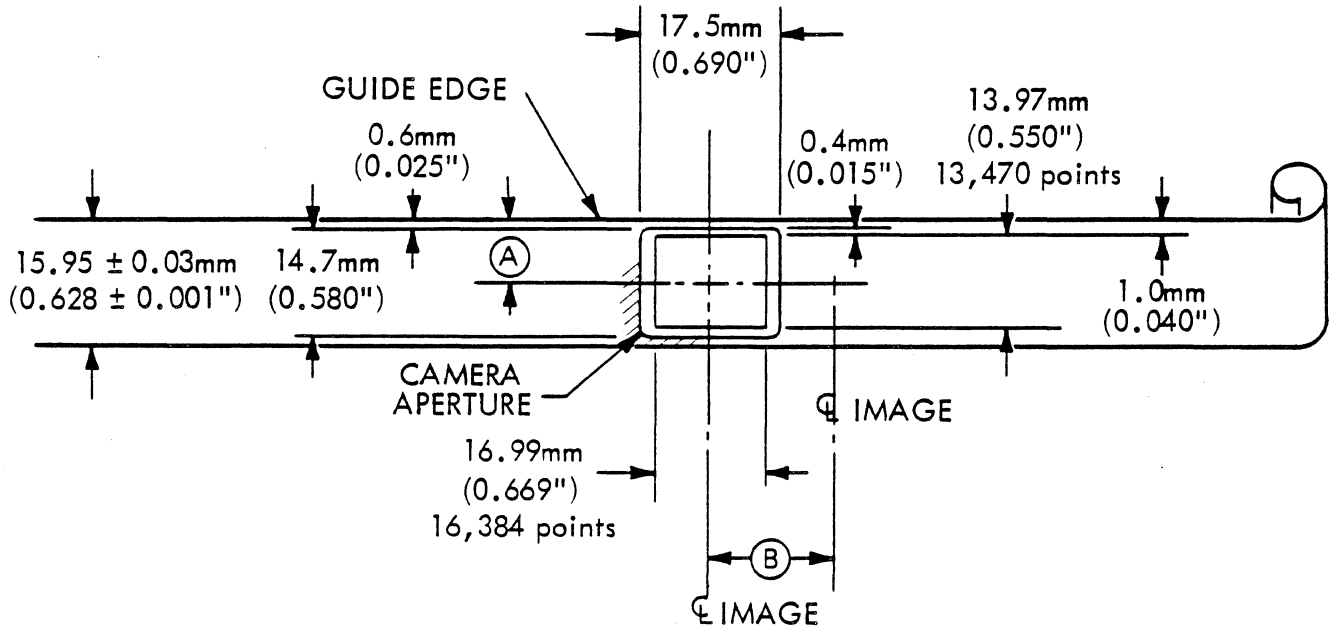

(A) CENTER OF IMAGE TO GUIDE EDGE OF FILM: 7.98 ± 0.13mm (0.314 ± 0.005") REPEATABLE IMAGE TO IMAGE WITHIN ±0.04mm (0.0015").

(B) FILM ADVANCE

NO.	DISTANCE mm inches	TIME msec
1	3.0 ± 0.04 (0.1175 ± 0.0015)	34
2	6.0 ± 0.05 (0.2350 ± 0.002)	50
3	9.0 ± 0.05 (0.3525 ± 0.002)	62
4	11.9 ± 0.05 (0.4700 ± 0.002)	74
5	14.9 ± 0.08 (0.5875 ± 0.003)	86
6	17.9 ± 0.08 (0.7050 ± 0.003)	98
7	20.9 ± 0.08 (0.8225 ± 0.003)	110
8	23.9 ± 0.08 (0.9400 ± 0.003)	122

3. ADDRESSABLE POINTS ON FILM: 965/mm (24,510/inch).

FILM FORMAT FOR MODEL 8023 35MM UNSPROCKETED CAMERA

1. FILM SPECIFICATION: NMAS #MS2-71, ANSI #PH5.3 (REFERS TO ANSI #PH22.36)

2. MAXIMUM IMAGE:

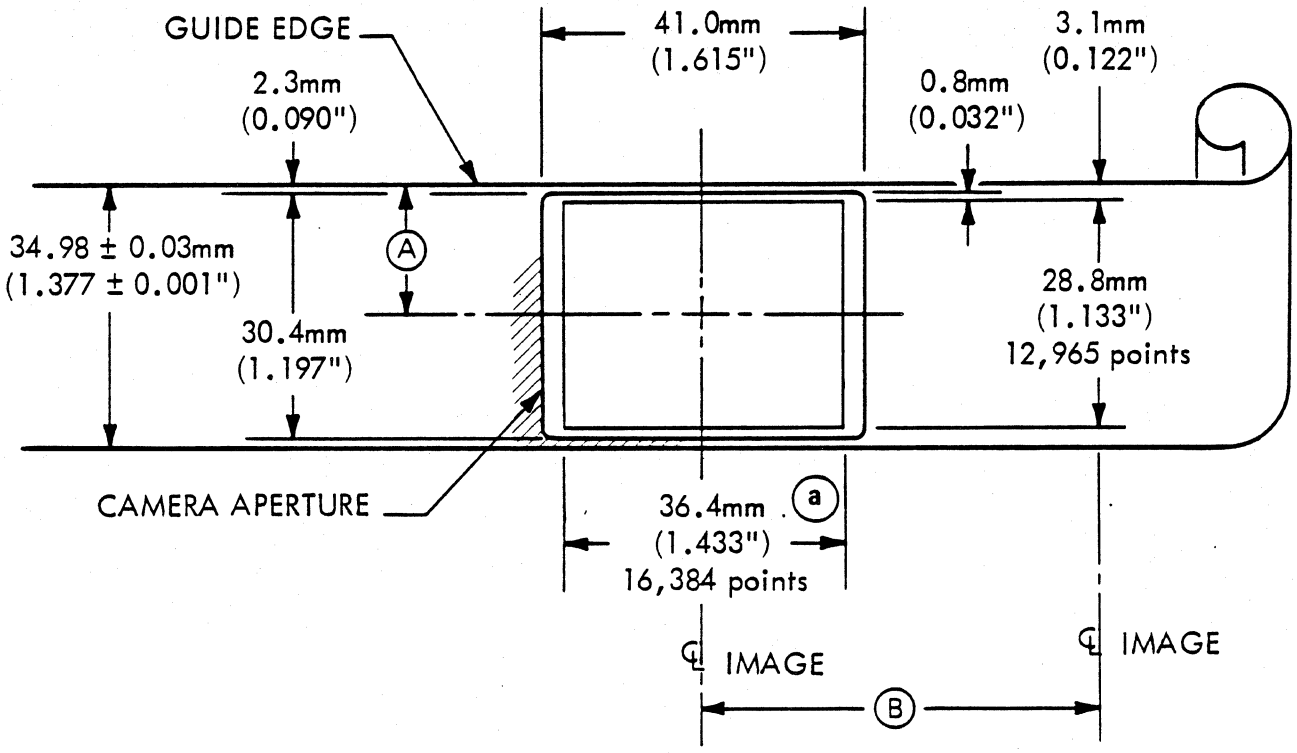

(a) ADDRESSABLE VECTOR CAN EXTEND TO 37.3mm (1.467").

(A) CENTER OF IMAGE TO GUIDE EDGE OF FILM: 17.5 ± 0.13mm (0.688 ± 0.005")
REPEATABLE IMAGE TO IMAGE WITHIN ±0.04mm (0.0015").

(B) FILM ADVANCE

NO.	DISTANCE mm	DISTANCE inches	TIME msec	COMMENTS
1	8.6 ± 0.04	(0.3385 ± 0.0015)	34	
2	17.2 ± 0.05	(0.6770 ± 0.002)	50	
3	25.8 ± 0.06	(1.0155 ± 0.0025)	62	
4	34.4 ± 0.08	(1.3540 ± 0.003)	74	mm inches
5	43.0 ± 0.13	(1.6925 ± 0.005)	86	
6	51.6 ± 0.78	(2.0310 ± 0.031)	98	NMA STD = 50.8 $^{+1.60}_{-0.00}$ ($2.000^{+0.062}_{-0.000}$)
7	60.2 ± 0.78	(2.3695 ± 0.031)	110	
8	68.8 ± 0.78	(2.7080 ± 0.031)	122	

3. ADDRESSABLE POINTS ON FILM: 450/mm (11,442/inch).

FILM FORMAT FOR MODEL 8024 16MM UNSPROCKETED CAMERA

1. FILM SPECIFICATION: NMAS #MS2-71, ANSI #PH5.3 (REFERS TO #PH22.5 DOUBLE PERFORATION AND PH12.5 SINGLE PERFORATION)

2. MAXIMUM IMAGE:

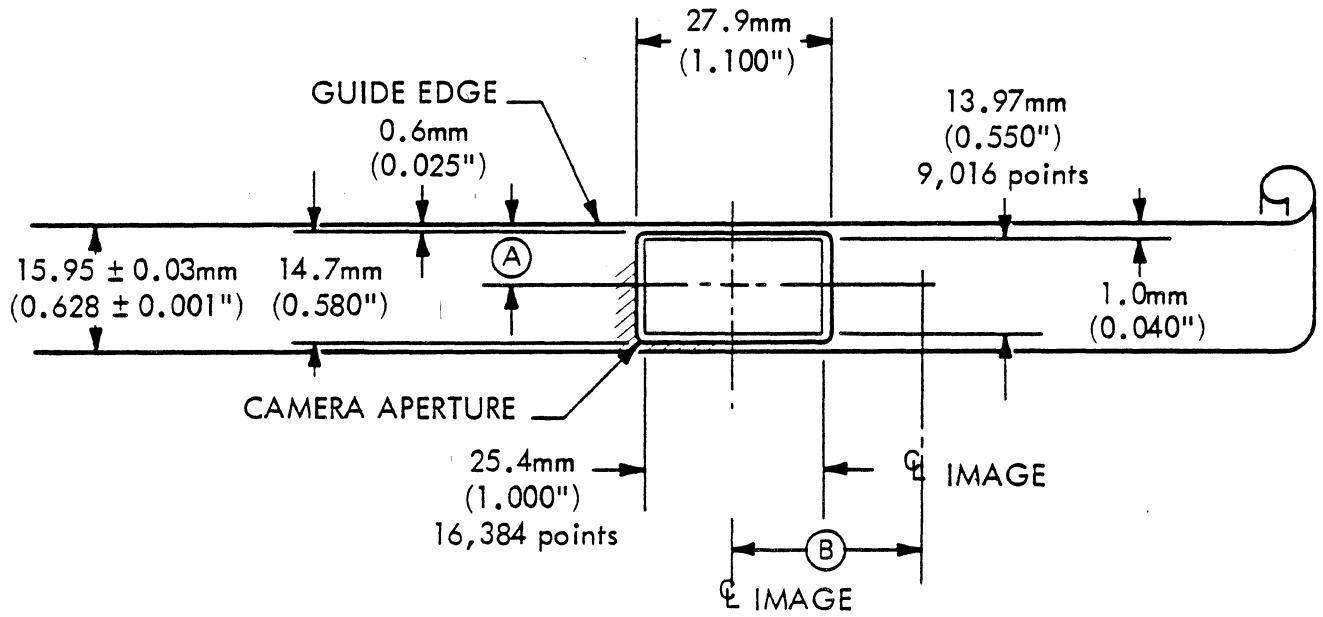

(A) CENTER OF IMAGE TO GUIDE EDGE OF FILM: 7.98 ± 0.13mm (0.314 ± 0.005") REPEATABLE IMAGE TO IMAGE WITHIN ±0.04mm (0.0015").

(B) FILM ADVANCE

NO.	DISTANCE mm inches	TIME msec
1	3.0 ± 0.04 (0.1175 ± 0.0015)	34
2	6.0 ± 0.05 (0.2350 ± 0.002)	50
3	9.0 ± 0.05 (0.3525 ± 0.002)	62
4	11.9 ± 0.05 (0.4700 ± 0.002)	74
5	14.9 ± 0.08 (0.5875 ± 0.003)	86
6	17.9 ± 0.08 (0.7050 ± 0.003)	98
7	20.9 ± 0.08 (0.8225 ± 0.003)	110
8	23.9 ± 0.08 (0.9400 ± 0.003)	122
48	143.3 ± 0.25 (5.640 ± 0.01)	732

3. ADDRESSABLE POINTS ON FILM: 645 points/mm (16,384 points/inch).

FILM FORMAT FOR MODEL 8025 105MM UNSPROCKETED CAMERA

1. FILM SPECIFICATION: NMAS #MS2-71

2. MAXIMUM IMAGE:

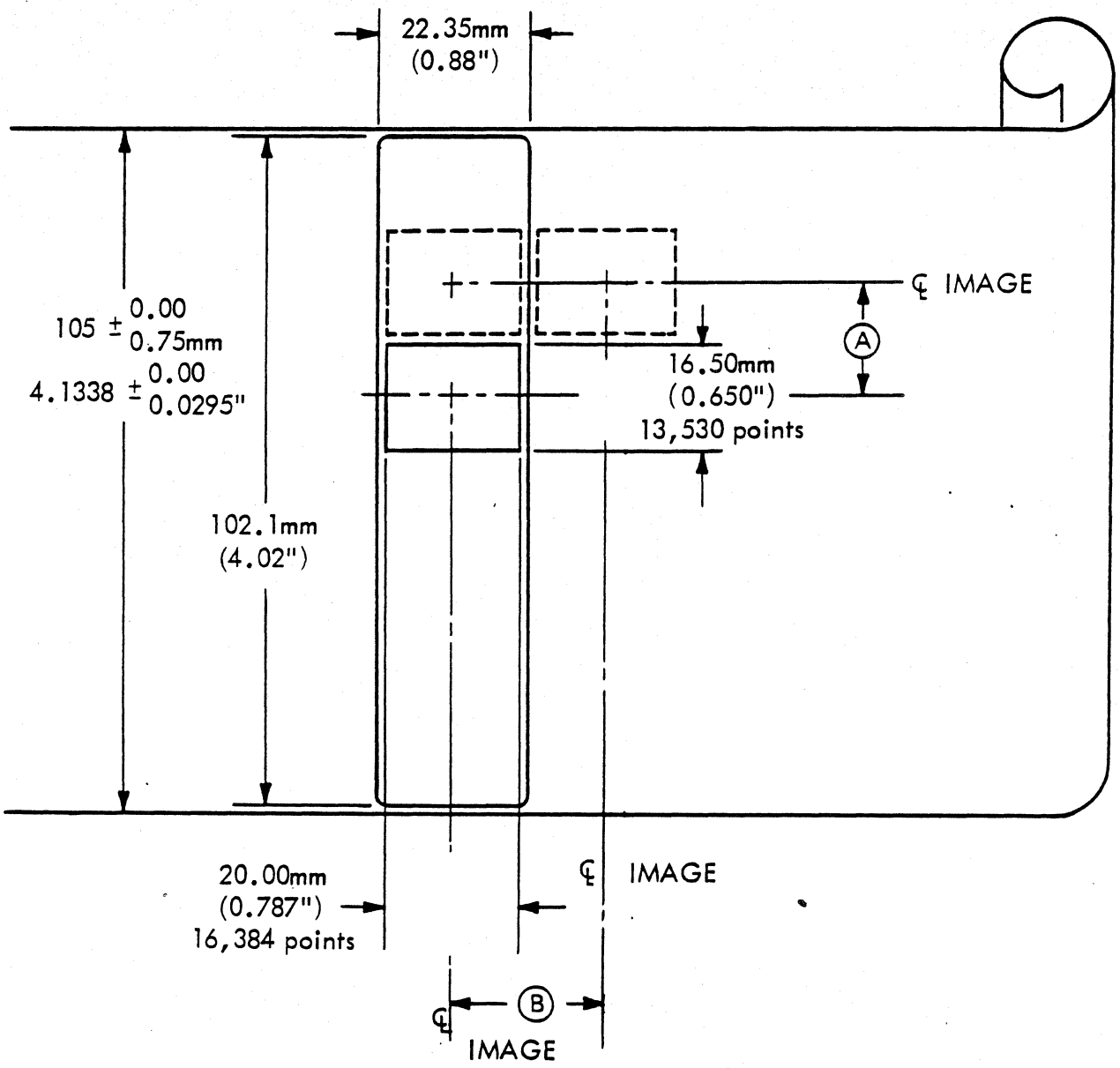

Ⓐ CENTER TO CENTER OF IMAGES (Y DIRECTION) DETERMINED BY CARRIAGE INDEX CONTROL DISC.

Ⓑ CENTER TO CENTER OF IMAGES (X DIRECTION) DETERMINED BY FILM ADVANCE SETTING.

3. ADDRESSABLE POINTS ON FILM: 820/mm (20,828/inch).

FILM FORMAT FOR MODEL 8026 35MM UNSPROCKETED CAMERA

1. FILM SPECIFICATION: NMAS #MS2-71, ANSI #PH5.3 (REFERS TO ANSI #PH22.36)

2. MAXIMUM IMAGE:

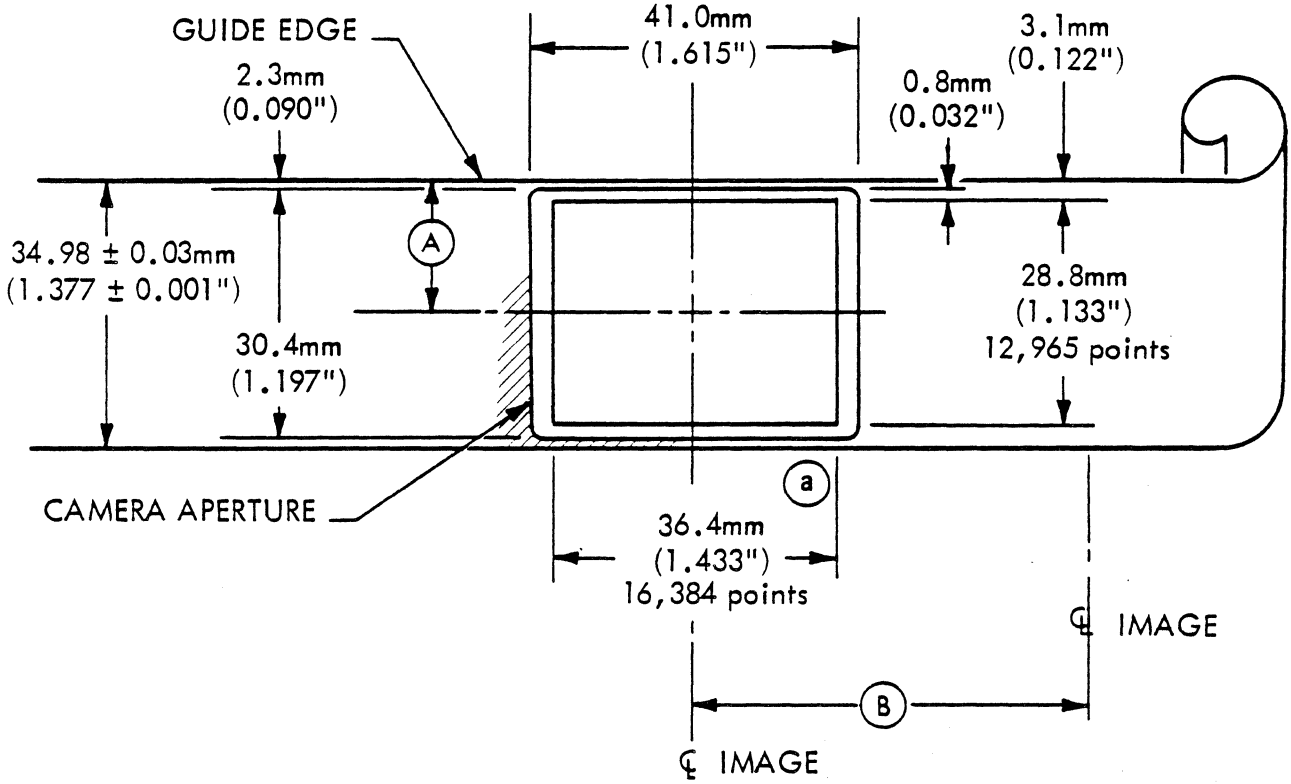

(a) ADDRESSABLE VECTOR CAN EXTEND TO 37.3mm (1.467").

(A) CENTER OF IMAGE TO GUIDE EDGE OF FILM: 17.5 ± 0.13mm (0.688 ± 0.005")
REPEATABLE IMAGE TO IMAGE WITHIN ± 0.04mm (0.0015").

(B) FILM ADVANCE

NO.	DISTANCE mm	DISTANCE inches	TIME msec	COMMENTS
1	8.6 ± 0.04	(0.3385 ± 0.0015)	34	
2	17.2 ± 0.05	(0.6770 ± 0.002)	50	
3	25.8 ± 0.06	(1.0155 ± 0.0025)	62	
4	34.4 ± 0.08	(1.3540 ± 0.003)	74	
5	43.0 ± 0.13	(1.6925 ± 0.005)	86	mm inches
6	51.6 ± 0.78	(2.0310 ± 0.031)	98	NMA STD = 50.8 $^{+1.60}_{-0.0}$ ($2.000 ^{+0.062}_{-0.000}$)
7	60.2 ± 0.78	(2.3695 ± 0.031)	110	
8	68.8 ± 0.78	(2.7080 ± 0.031)	122	

3. ADDRESSABLE POINTS ON FILM: 450/mm (11,442/inch).

Chapter 5
APPLICATIONS

5.1 Many applications can be performed on the FR 80. For purposes of explanation, they are divided into the following general categories: business, scientific, engineering, and publishing.

B U S I N E S S A P P L I C A T I O N S

R e t r i e v a l

5.2 Information retrieval has been the first large-scale COM business application. Mailing lists or account files are recorded on 16mm roll film from which a number of copies are made. Subsequent changes in address are verified against the recorded addresses so that rejects can be noted in later data processing cycles. Similarly, when a customer calls to question his ledger account, the history is available to the customer service representative. In a bank, for example, the current status of every account may be available to every branch.

5.3 A typical retrieval application is a batch-processed file that is updated daily, weekly, or on a cycle billing basis. If an up-to-the-minute status is required, on-line terminals are generally used. Thus, an airline will use a microfilm retrieval system for the semi-monthly updated airline guide, while right beside it is an on-line terminal for reservation status.

5.4 The advantages of COM are speed, compactness of data, and lower reproduction costs. For example, an FR 80 with the high-speed page composition option can record up to 15 times faster than a typical line printer. A single 4" x 6" microfiche can have 192 pages of computer printout at 42X reduction, plus a title block that can be read at arm's length. The reproduction cost for a microfiche is approximately 10 cents, and viewers are now available for less than $100.

C h a r t s a n d G r a p h s

5.5 Business data output from a computer is usually in the form of an alphanumeric listing. Some companies have acquired graphics plotters (and a staff to program them)

so that this data can be reduced to charts and graphs for rapid interpretation. But most companies still rely on a staff of people armed with chart pads and a photographic capability. Unfortunately, it may take several weeks before the computer data can be converted into chart presentations for use by management. For those who believe a picture is worth a thousand words, there is another way.

5.6 The FR 80 takes the raw data tape from the computer, with weekly sales information, for instance, and records all of the detailed information on microfiche. Using the same tape and running it again, the FR 80 next constructs and records a complete set of charts and graphs on roll film. These charts are then run off in 8-1/2" x 11" size on a hardcopy machine such as a Xerox Copyflo. The complete package, consisting of hardcopy charts and a backup data on microfiche, is available for management review only hours after the computer has finished updating the files.

5.7 Stock charts are a notable example of a business application where chart presentations are preferred to computer listings. Wherever management decisions or evaluations are made on the basis of data presentations, business executives should be able to review that data in an easy-to-read form that can be quickly produced, instead of being limited to voluminous computer printouts and delayed handmade charts. The FR 80 can also record business charts in color for direct viewing through 35mm slide projectors.

S C I E N T I F I C

5.8 There are many scientific uses for the FR 80. The following are a few that have already been implemented.

G r a y - L e v e l R e c o r d i n g

5.9 The ability of the FR 80 to record as many as 64 levels of gray makes it very useful in presenting data pictorially.

1. A cloud cover photograph of the earth is a good example. Gray-level data telemetered from a weather satellite can immediately be recorded on the FR 80 and evaluated by weather scientists.

2. In the petroleum field, geologists are accustomed to viewing variable density seismic recordings. These can now be produced on the FR 80. Full-size blowbacks are inexpensive and have astonishing clarity.

3. Images enhanced by computer techniques such as Fourier transformations can be re-recorded directly on the FR 80 for evaluation.

Plotting

5.10 The FR 80's plotting capability, particularly with the Model 8026 high-resolution camera, makes it possible to record very complex plots in a single 35mm frame. The clarity of these FR 80 plots approaches that of the best pen-and-ink plotters, at a small fraction of the time and cost associated with the pen plotters.

5.11 *Contour Maps.* The petroleum industry, public utilities, highway departments, and geologically oriented organizations are typical of those who have use for contour maps. Of definite economic value is the FR 80's ability to produce, in less than a minute, the same maps that require an hour or more on a pen-and-ink plotter. Hard-copy 30X (or more) blowbacks of FR 80 plots approach the quality of original pen-and-ink plots.

5.12 Perhaps even more important are the host computer savings resulting from the FR 80's ability to record the more natural and compact raw vector and character data rather than having to convert it to the incremental point plot format. Savings on data tape approach 80% to 90%, while host computer time is cut by up to 40% to 50%.

Computer Animation

5.13 The FR 80 can be operated with either 16mm or 35mm sprocketed, pin-registered movie cameras.

5.14 *Scientific Data.* The representation of natural phenomena, such as particle movement in a nuclear environment, can be very graphic by recording and projecting it with each movie frame representing a time interval.

5.15 *Structural Analysis.* Computer animation has been very effective in viewing perspectives for architectural evaluation. Also, aircraft structural design has been aided by making animated movies to view the effects of

the aircraft under stress. This is much better than looking through stacks of computer printouts several feet high.

5.16 *Design Evaluation.* By using the "19-element man" in animated action, scientists have been able to evaluate human factors during the design phase of aircraft cockpits, etc. Also, simulations of various functions such as aircraft engine changes, and pilot visibility during landings, have prevented costly design errors.

5.17 *Educational Films.* Anyone who has seen the better training films used by the military services can appreciate how the most complex principles can be effectively presented. Calculus, statistics, physics, and even the new math can benefit from this type of visual presentation.

5.18 *Commercials.* More and more TV program lead-ins and commercials are the product of computer animation. The Norelco electric razor ad with the computer man was recorded on an FR 80.

E N G I N E E R I N G

5.19 The graphic capability of the FR 80 makes it particularly adaptable for use in engineering applications.

E n g i n e e r i n g D a t a P l o t s

5.20 For years, COM recorders have been used to plot engineering data. In fact, this application was the rationale for the development of COM at the beginning of the 1960s. For some companies, this is still the basic application. The cost savings can be very large, particularly when one considers the cost of a delay in the development of a complex system such as an aircraft, ship, rocket or space vehicle.

E n g i n e e r i n g D r a w i n g s

5.21 A sizeable percentage of the total cost of the development of a product is chargeable to documentation. Entire floors of buildings are filled with draftsmen producing and revising drawings. It wasn't until recently that the COM recording technology reached the point where it was feasible to COM-record engineering line drawings on 35mm film, with sufficient quality to eliminate the need for photographing an original full-sized drawing.

5.22 Standards groups are currently working on a COM engineering drawing specification that would provide an alternative to the current MIL specifications. A few companies are already producing line drawings in this fashion, using the FR 80.

5.23 Not all engineering drawings are line drawings. In some cases, a substantial percentage is strictly computer printout. One organization is using the FR 80 to record eight pages of computer printout with randomly occurring forms on a single 35mm frame. These frames are mounted in aperture cards for use in the company's aperture drawing system. Previously, this would have involved piecing together the eight pages and carefully overlaying the appropriate forms in preparation for photography by a planetary camera system. Moreover, the resulting frame would not have had the quality of the FR 80 frame, which is recorded in only 3 or 4 seconds.

5.24 IBM side-chain printer tapes and tapes formatted for pen-and-ink plotters, such as the CalComp 500, 600, and 700 series, can be recorded directly on the FR 80.

Printed Circuit Boards

5.25 Computers have been easily adapted to the design of printed circuit boards. The FR 80 can provide high-quality film output for the engineer to verify the accuracy of the design. This is not limited to the usual single-stroke appearance of the pen-and-ink plot; the various line widths, pads, and filled-in areas can be shown exactly the way the finished board would look. In fact, the FR 80 is capable of producing 35mm film of sufficient quality to be blown up for the final film master. III has made some of its own printed circuit boards in this manner.

Integrated Circuit Masks

5.26 Presently, integrated circuit masks are made on large, flat-bed plotters. By using an FR 80 coupled to a film transport, to provide the necessary increase in resolution and accuracy, a marked reduction in turnaround time and costs can be achieved.

Numerical Control Applications

5.27 The FR 80 presents a very convenient way of quickly and economically checking N/C tapes for errors before proceeding with metalcutting operations.

PERT (CPM) Networks

5.28 The automation of PERT (CPM) network production by use of the FR 80 will produce substantial savings in time and cost over manual methods currently in use. There are several software systems available today, which, when used in conjunction with the FR 80, will completely eliminate the need for network drawing.

PUBLISHING

5.29 The FR 80 can offer substantial savings in printing applications common to most corporate organizations. Making plates directly from FR 80 output results in fewer pages and plates, thus reducing printing costs. Some of the more common applications are:

1. Price lists
2. Parts catalogs
3. Directories
4. Standard parts lists
5. Short-run computer printout

Chapter 6
CARRIAGE CONTROLS

TABLE 6-1. ASA CARRIAGE CONTROLS.

III char code (octal)	ASA carriage controls	Operation	III control code (octal)
040	blank	Space 1 before printing	015
060	Ø	Space 2 before printing	025
055	- (minus)	Space 3 before printing	035
053	+	Suppress space after printing	001
061	1	Skip to channel 1 before printing	215
062	2	Skip to channel 2 before printing	225
063	3	Skip to channel 3 before printing	235
064	4	Skip to channel 4 before printing	245
065	5	Skip to channel 5 before printing	255
066	6	Skip to channel 6 before printing	265
067	7	Skip to channel 7 before printing	275
070	8	Skip to channel 8 before printing	305
071	9	Skip to channel 9 before printing	315
101	A	Skip to channel 10 before printing	325
102	B	Skip to channel 11 before printing	335
103	C	Skip to channel 12 before printing	345
For the FR 80 the standard ASA control set is extended to handle the following:			
044	$	Clear film gate, don't print, and start new job with subsequent line. (Contents of the line will be typed, preceded by accounting information.)	377
052	*	Page synchronize	363
125	U	Page synchronize, and select form #1	012
126	V	Page synchronize, and select form #2	022
127	W	Page synchronize, and select form #3	032
130	X	Page synchronize, and select form #4	042
131	Y	Page synchronize, and select form #5	052
132	Z	Page synchronize, and select form #6	062
054	,	See Fiche Titling Format, p. 46.	353

TABLE 6-2. 360 CARRIAGE CONTROLS.

360 carriage controls (octal)	Operation
1	Suppress space after printing
11	Space 1 after printing
21	Space 2 after printing
31	Space 3 after printing
211	Skip to channel 1 after printing
221	Skip to channel 2 after printing
231	Skip to channel 3 after printing
241	Skip to channel 4 after printing
251	Skip to channel 5 after printing
261	Skip to channel 6 after printing
271	Skip to channel 7 after printing
301	Skip to channel 8 after printing
311	Skip to channel 9 after printing
321	Skip to channel 10 after printing
331	Skip to channel 11 after printing
341	Skip to channel 12 after printing
13	Space 1 line without printing
23	Space 2 lines without printing
33	Space 3 lines without printing
213	Skip to channel 1 without printing
223	Skip to channel 2 without printing
233	Skip to channel 3 without printing
243	Skip to channel 4 without printing
253	Skip to channel 5 without printing
263	Skip to channel 6 without printing
273	Skip to channel 7 without printing
303	Skip to channel 8 without printing
313	Skip to channel 9 without printing
323	Skip to channel 10 without printing
333	Skip to channel 11 without printing
343	Skip to channel 12 without printing
3	NOP

NOTE: Since 360 controls are a subset of III carriage controls, no III control code equivalence is given.

TABLE 6-3. 1401 CARRIAGE CONTROLS.

III char code (octal)	1401 carriage controls	Operation	III control code (octal)
061	1	Skip to channel 1 before printing	215
062	2	Skip to channel 2 before printing	225
063	3	Skip to channel 3 before printing	235
064	4	Skip to channel 4 before printing	245
065	5	Skip to channel 5 before printing	255
066	6	Skip to channel 6 before printing	265
067	7	Skip to channel 7 before printing	275
070	8	Skip to channel 8 before printing	305
071	9	Skip to channel 9 before printing	315
060	Ø	Skip to channel 10 before printing	325
043	#	Skip to channel 11 before printing	335
140	@	Skip to channel 12 before printing	345
101	A	Skip to channel 1 after printing	211
102	B	Skip to channel 2 after printing	221
103	C	Skip to channel 3 after printing	231
104	D	Skip to channel 4 after printing	241
105	E	Skip to channel 5 after printing	251
106	F	Skip to channel 6 after printing	261
107	G	Skip to channel 7 after printing	271
110	H	Skip to channel 8 after printing	301
111	I	Skip to channel 9 after printing	311
077	?	Skip to channel 10 after printing	321
056	.	Skip to channel 11 after printing	331
031	¤	Skip to channel 12 after printing	341
112	J	Space 1 before printing	015
113	K	Space 2 before printing	025
114	L	Space 3 before printing	035
057	/	Space 1 after printing	011
123	S	Space 2 after printing	021
124	T	Space 3 after printing	031
For the FR 80 the standard 1401 control set is extended to handle the following:			
044	$	Clear film gate, don't print, and start new job with subsequent line. (Contents of the line will be typed, preceded by accounting information.)	377
052	*	Page synchronize	363
125	U	Page synchronize, and select form #1	012
126	V	Page synchronize, and select form #2	022
127	W	Page synchronize, and select form #3	032
130	X	Page synchronize, and select form #4	042
131	Y	Page synchronize, and select form #5	052
132	Z	Page synchronize, and select form #6	062
054	,	See Fiche Titling Format, p. 46.	353

Bit definitions in III control code:

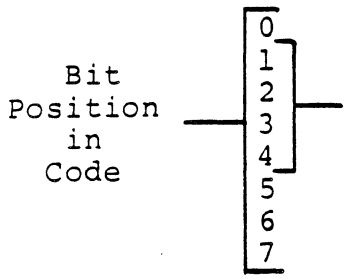

+400 — Adding 400_8 to an III control code will cause a single space after the line in addition to performing the indicated action.

TABLE 6-4. INFORMATION INTERNATIONAL CARRIAGE CONTROLS.

[Special FR 80 carriage control characters recognized]

III control code (octal)	Operation
377	(Skip to channel 15 without printing) Clear film gate, don't print and start new job with subsequent line. (Contents of the line will be typed, preceded by accounting information.)
363	(Skip to channel 14 without printing) Page synchronize.
353	(Skip to channel 13 without printing) Fiche titling format (see p. 46)
012 022 172	Select form 1, 2, ..., 15 to be overlaid on subsequent data, and page synchronize.
	NOTE: Page synchronize means interpret all digits in the line as a page number; this page number will be used to assign a position on the film frame to the page that follows. If there are no digits in the line the next film frame position will be assigned. (For applications having more than one page per frame.) The line will not be printed. A skip to channel #1 will be done. (If the next line requests a skip to channel #1, it will not skip to next page.)

F I C H E T I T L I N G F O R M A T

6.1 The fiche title may occupy any number of fiche image rows across the top of the fiche (two rows are used in fig. 6-1).

6.2 An integral number of title character positions (horizontally and vertically) may be assigned to each fiche image in the title rows. In fig. 6-1, the words "FICHE TITLE" have 4-character positions per image horizontally, and 2-line positions vertically.

6.3 The character size used for the title is determined by the number of characters specified horizontally per image.

6.4 Up to 128 (assembly parameter in print processor) characters may be displayed in the title (not including spaces). Up to 16 different messages may be put into the title area.

6.5 The input for the titling may be from the operator's Teletype or from records on the print tape. In either case, the format is the same. On the print tape, a comma in the carriage control position causes characters from the printing positions to be interpreted as titling information.

6.6 To enter a title from the Teletype, the operator types TITLE/titling information).

6.7 Titling information is in the following format:

6.8 The first character will be:

T - Beginning of title (this title to supersede previous title).

C - Continuation of title information.

(blank) - (from tape only) Step to next fiche with same title. All subsequent characters will be ignored.

6.9 The second character will be ignored unless the first character was a T, in which case it will be a digit telling how many fiche image rows will be used for title area.

6.10 Subsequent characters are in a free format, specifying titling parameters for the following titling message. (Blanks are ignored.) Each parameter specification

consists of a letter followed by one or two numbers (separated by commas). The letter designates which parameter(s) will be set; the number designates the value to be assigned. A dollar sign indicates that parameter assignments continue in next record. Parameter input will be terminated by a slash (/), which initiates input of text for this title message.

6.11 Parameters:

Cn - Number of characters to be placed horizontally in fiche image area

Ln - Number of text line positions into which a fiche image area will be divided

Hm,n - Horizontal position for first character of message

m = column number
n = character position within column (left character = 1)

Vm,n - Vertical position for first character of message

m = row number
n = line position within rows (top line = 1)

6.12 Text for message may be any character in the printing set. The dollar sign is used as an escape code and the following character is a control code. Control characters are:

$ - Put $ into title message.

L - Line return; return to initial character position of this message one line position lower.

C - Text continues in next record, beginning with the third character.

M - End of message, parameters assignments for next message follow.

T - End of title.

a digit - The digit (n) represents the number of characters to be used as a fiche number. The following n characters will be used for the initial fiche #, and its value will be incremented by one on each subsequent fiche.

6.13 Examples:

1. The following title information example will produce the title shown in figure 6-1:

```
T2 C4 H1,1 L2 V1,1 /FICHE TITLE$M$
C C6 H1,1 L2V2,1/October 12,1970$M$
C C8H4,1 L4 V1,3 /Recorded$L$L   on$C
C $L$L FR 80$M$
C C3 H5,2 L2 V1,1 /No.$3  1$T
```

2. To output two lines of 60 characters in the top fiche image row with 5 characters across each fiche image:

```
T1 C5 L2 H1,1 V1,1/ (60 characters)$C
C1 $L (60 characters)$T
```

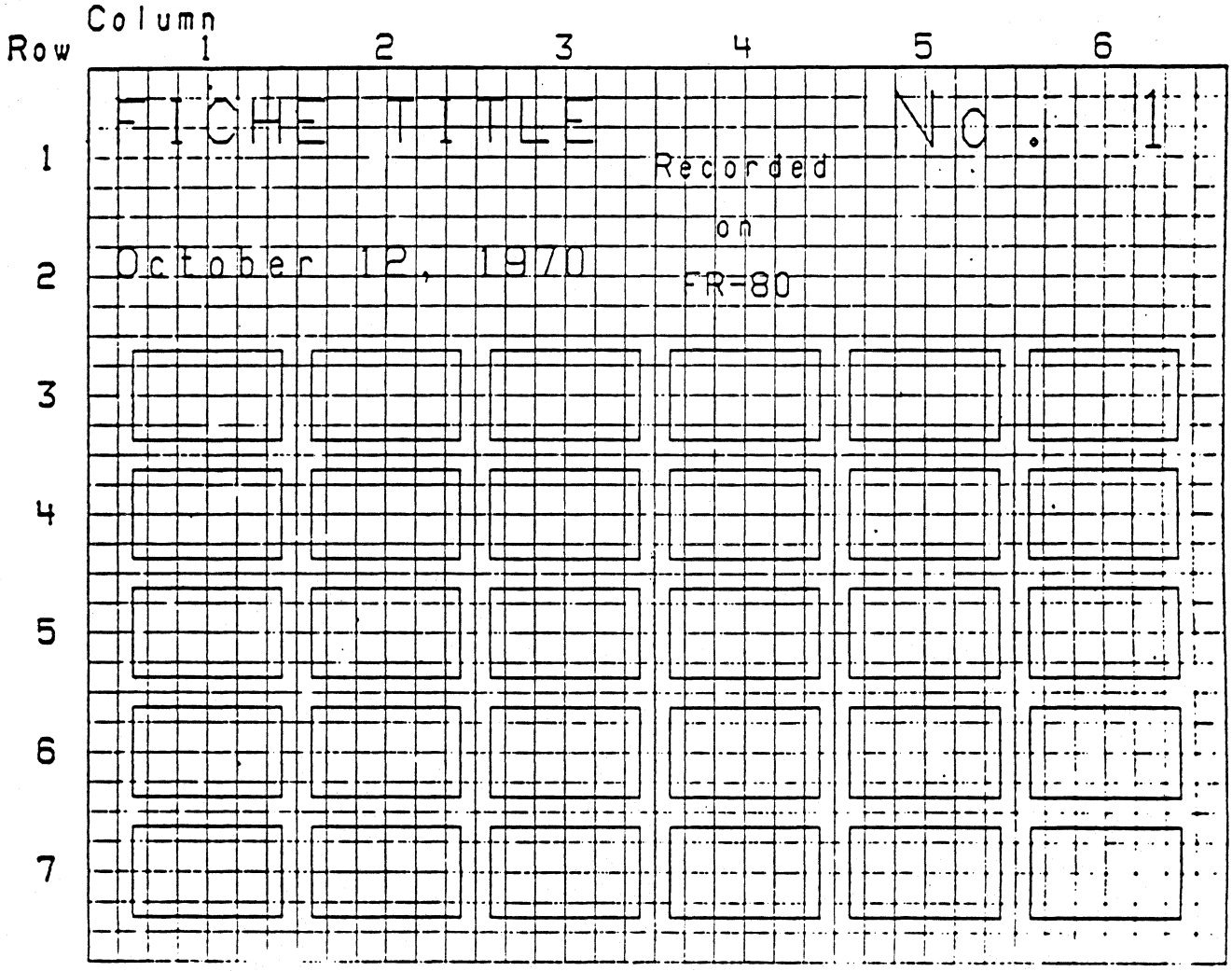

Figure 6-1. Fiche Titling Example.

CHAPTER 7

CHARACTER CODES

OCT	DEC	HEX	I.I.I.
000	000	00	null
001	001	01	α
002	002	02	β
003	003	03	γ
004	004	04	δ
005	005	05	ϵ
006	006	06	η
007	007	07	θ
010	008	08	λ
011	009	09	μ
012	010	0A	ν
013	011	0B	π
014	012	0C	σ
015	013	0D	∑
016	014	0E	ϕ
017	015	0F	ω
020	016	10	Ω
021	017	11	'
022	018	12	¯
023	019	13	°
024	020	14	∫
025	021	15	±
026	022	16	¢
027	023	17	∂
030	024	18	□
031	025	19	□
032	026	1A	Δ
033	027	1B	←
034	028	1C	→
035	029	1D	↑
036	030	1E	↓
037	031	1F	\

OCT	DEC	HEX	I.I.I.
040	032	20	space
041	033	21	!
042	034	22	"
043	035	23	#
044	036	24	$
045	037	25	%
046	038	26	&
047	039	27	'
050	040	28	(
051	041	29	)
052	042	2A	*
053	043	2B	+
054	044	2C	,
055	045	2D	-
056	046	2E	.
057	047	2F	/
060	048	30	0
061	049	31	1
062	050	32	2
063	051	33	3
064	052	34	4
065	053	35	5
066	054	36	6
067	055	37	7
070	056	38	8
071	057	39	9
072	058	3A	:
073	059	3B	;
074	060	3C	<
075	061	3D	=
076	062	3E	>
077	063	3F	?

OCT	DEC	HEX	I.I.I.
100	064	40	'
101	065	41	A
102	066	42	B
103	067	43	C
104	068	44	D
105	069	45	E
106	070	46	F
107	071	47	G
110	072	48	H
111	073	49	I
112	074	4A	J
113	075	4B	K
114	076	4C	L
115	077	4D	M
116	078	4E	N
117	079	4F	O
120	080	50	P
121	081	51	Q
122	082	52	R
123	083	53	S
124	084	54	T
125	085	55	U
126	086	56	V
127	087	57	W
130	088	58	X
131	089	59	Y
132	090	5A	Z
133	091	5B	[
134	092	5C	~
135	093	5D	]
136	094	5E	^
137	095	5F	_

OCT	DEC	HEX	I.I.I.
140	096	60	@
141	097	61	a
142	098	62	b
143	099	63	c
144	100	64	d
145	101	65	e
146	102	66	f
147	103	67	g
150	104	68	h
151	105	69	i
152	106	6A	j
153	107	6B	k
154	108	6C	l
155	109	6D	m
156	110	6E	n
157	111	6F	o
160	112	70	p
161	113	71	q
162	114	72	r
163	115	73	s
164	116	74	t
165	117	75	u
166	118	76	v
167	119	77	w
170	120	78	x
171	121	79	y
172	122	7A	z
173	123	7B	{
174	124	7C	—
175	125	7D	}
176	126	7E	|
177	127	7F	▒

OCT	DEC	HEX	I.I.I. (Control codes)	
200	128	80	null	
201	129	81	start message	★
202	130	82		
203	131	83	end message	
204	132	84	end job	★
205	133	85		
206	134	86		
207	135	87		
210	136	88		
211	137	89	horizontal tab	★
212	138	8A	line feed	
213	139	8B	vertical tab	★
214	140	8C	form feed	
215	141	8D	carriage return	
216	142	8E	new page	★
217	143	8F	new line	
220	144	90		
221	145	91		
222	146	92		
223	147	93		
224	148	94		
225	149	95		
226	150	96		
227	151	97		
230	152	98		
231	153	99		
232	154	9A		
233	155	9B		
234	156	9C		
235	157	9D		
236	158	9E		
237	159	9F	backspace	

OCT	DEC	HEX	I.I.I.
240	160	A0	√
241	161	A1	‡
242	162	A2	‡
243	163	A3	⫴
244	164	A4	⌒
245	165	A5	ƀ
246	166	A6	ƈ
247	167	A7	⩽
250	168	A8	≠
251	169	A9	⩾
252	170	AA	∨
253	171	AB	ō
254	172	AC	-
255	173	AD	—
256	174	AE	∿
257	175	AF	¬
260	176	B0	∧
261	177	B1	C_R
262	178	B2	½
263	179	B3	
264	180	B4	
265	181	B5	
266	182	B6	
267	183	B7	
270	184	B8	
271	185	B9	
272	186	BA	
273	187	BB	
274	188	BC	
275	189	BD	
276	190	BE	
277	191	BF	

★Not yet operative.

OCT	DEC	HEX	I.I.I.
300	192	C0	·
301	193	C1	•
302	194	C2	•
303	195	C3	•
304	196	C4	
305	197	C5	
306	198	C6	
307	199	C7	
310	200	C8	∘
311	201	C9	∘
312	202	CA	○
313	203	CB	○
314	204	CC	
315	205	CD	
316	206	CE	
317	207	CF	
320	208	D0	
321	209	D1	
322	210	D2	
323	211	D3	
324	212	D4	
325	213	D5	
326	214	D6	
327	215	D7	
330	216	D8	
331	217	D9	
332	218	DA	
333	219	DB	
334	220	DC	
335	221	DD	
336	222	DE	
337	223	DF	

OCT	DEC	HEX	I.I.I.
340	224	E0	
341	225	E1	
342	226	E2	
343	227	E3	
344	228	E4	
345	229	E5	
346	230	E6	
347	231	E7	
350	232	E8	
351	233	E9	
352	234	EA	
353	235	EB	
354	236	EC	
355	237	ED	
356	238	EE	
357	239	EF	
360	240	F0	
361	241	F1	
362	242	F2	
363	243	F3	
364	244	F4	
365	245	F5	
366	246	F6	
367	247	F7	
370	248	F8	
371	249	F9	
372	250	FA	
373	251	FB	
374	252	FC	
375	253	FD	
376	254	FE	
377	255	FF	

HEX		0	1	2	3	4	5	6	7	8	9	A	B	C	D	E	F
	OCT	0	1	2	3	4	5	6	7	10	11	12	13	14	15	16	17
0X	00X	NU	α	β	γ	δ	ε	η	θ	λ	μ	ν	π	σ	Σ	φ	ω
1X	02X	Ω	'	¯	°	∫	±	¢	∂	□	¤	Δ	←	→	↑	↓	\
2X	04X		!	"	#	$	%	&	'	(	)	*	+	,	-	.	/
3X	06X	0	1	2	3	4	5	6	7	8	9	:	;	<	=	>	?
4X	10X	'	A	B	C	D	E	F	G	H	I	J	K	L	M	N	O
5X	12X	P	Q	R	S	T	U	V	W	X	Y	Z	[	~	]	^	_
6X	14X	@	a	b	c	d	e	f	g	h	i	j	k	l	m	n	o
7X	16X	p	q	r	s	t	u	v	w	x	y	z	{	¯	}	|	⊠
8X	20X	CO	CO	UN	CO	CO	UN	UN	UN	UN	CO	CO	CO	CO	CO	CO	CO
9X	22X	UN	UN	UN	UN	UN	UN	UN	UN	UN	UN	UN	UN	UN	UN	UN	UN
AX	24X	✓	‡	‡	⁂	⁓	ƀ	ƨ	∠	≠	⊿	⋎	ō	-	—	∿	⁓
BX	26X	^	⁋	⅋	UN	UN	UN	UN	UN	UN	UN	UN	UN	UN	UN	UN	UN
CX	30X	·	•	•	●	UN	UN	UN	UN	∘	∘	○	○	UN	UN	UN	UN
DX	32X	UN	UN	UN	UN	UN	UN	UN	UN	UN	UN	UN	UN	UN	UN	UN	UN
EX	34X	UN	UN	UN	UN	UN	UN	UN	UN	UN	UN	UN	UN	UN	UN	UN	UN
FX	36X	UN	UN	UN	UN	UN	UN	UN	UN	UN	UN	UN	UN	UN	UN	UN	UN

NU-NULL CO-CONTROL UN-UNSPECIFIED

Chapter 8
FORM DESIGN LANGUAGE

F O R M D E S I G N S Y N T A X

8.1 The parameters preceding the following commands are to be interpreted as follows:

h - number of horizontal units being used

i - number of horizontal user units

j - number of vertical user units

m,n - numbers

v - number of vertical units being used

x - number of FR 80 scope points in the X (horizontal) axis

y - number of FR 80 scope points in the Y (vertical) axis

8.2 Many of the parameters are enclosed in brackets. This is to indicate that those parameters are not required. The number in parentheses after the command characters indicates the number (if any) of 18-bit words of storage required for the command.

TABLE 8-1. FORM DESIGN SYNTAX COMMANDS.

Command	Meaning
[i] A (1)	Draw horizontal vector and change current position to end point.
[m][,n] B ( )	Set intensity and spot size; both range from 0 to 7 (default is 7,0). NOTE Setting either the intensity or the spot size alone will require one word. Setting both requires two.

TABLE 8-1. FORM DESIGN SYNTAX COMMANDS *(Continued)*.

Command	Meaning
j C (1)	Set character size. NOTE A single argument to this command will be interpreted as a number of units. If two arguments are supplied, they will be used to specify a fraction of user units, the first number being the numerator, the second the denominator.
[i][,j] D (0)	Set deltas.
i E (1)	Set character spacing. (See preceding NOTE.)
j F (1)	Set character line feed. (See preceding NOTE.)
[m][,n] G (1)	Display page or frame number. m is the number of digit positions being allowed. n is defined as follows: 8 = frame number; leading digits blanks 12 = frame number; leading digits printing zeros 16 = page number; leading digits blanks 20 = page number; leading digits printing zeros This command should be preceded by the C and E commands, used as they are for unjustified text. The default parameters for this command are 4, 16. The page and frame output is determined by the status of the CURRENT PAGE and FRAME commands of the PRINT program.
[i] H (1)	Draw horizontal vector without changing current position.
[i] I (1)	Move in X axis without drawing.

TABLE 8-1. FORM DESIGN SYNTAX COMMANDS *(Continued)*.

Command	Meaning
[j] J (1)	Move in Y axis without drawing.
i,j L (2)	Draw vector without changing current position.
i,j M (2)	Draw vector and change current position to end point.
[n] N ( )	With new parameter, name nonpermanent picture definition that follows. With no parameter, end definition. With old parameter, execute picture definition. The execution of a picture definition leaves the current position unchanged. NOTE Naming a picture definition requires three words plus the word requirements of the commands within the definition. Recalling a definition requires two.
[n] O	Dumps the binary form currently in core onto magnetic tape. The film will advance n pulldowns when the tape is read. If no parameter is typed, the film will advance one frame.
x,y P (2)	Move to new position.
[m][,n] Q (1)	Plot a point. With no parameters, the intensity and spot size set in the B command will be used. If parameters are supplied, they will affect the plotting of this point only.
[n] R ( )	Repeat (with no parameter, end repeat).

TABLE 8-1. FORM DESIGN SYNTAX COMMANDS *(Continued)*.

Command			Meaning
			NOTE A repeat usually requires two words plus the word requirements of the commands within the repeat. The exception is a repeat larger than 225, which requires an additional word.
x,y	S	(0)	Define space and line feed values.
	T		Read Syntax from paper tape.
[j]	U	(1)	Draw vertical vector and change current position to end point.
[j]	V	(1)	Draw vertical vector without changing current position.
n	W	(0)	Establish border around text within a box (default is 8).
h,x	X	(0)	Scale horizontal units to scope points.
v,y	Y	(0)	Scale vertical units to scope points.
m,n	Z	(0)	Smallest fraction of space and line feed values to be used as a unit.
[j][,n]	!A	(3)	Draw clockwise arc with center at current position and number of degrees specified by !L. j is the radius expressed in vertical units. n is the starting position in 1.5° increments clockwise from vertical (default is vertical).
n	!C	(0)	Set Text Mode: n = 0 UNJUSTIFIED n = 2 CENTERED n = 1 LEFT-JUSTIFIED n = 3 RIGHT-JUSTIFIED

TABLE 8-1. FORM DESIGN SYNTAX COMMANDS *(Continued)*.

Command	Meaning
[m][,n] !G (0)	Assigns the number of green (m) and blue (n) hits to be used for subsequent data. This command must be followed by an H command.
[m][,n] !H (2)	Assigns the number of clear (m) and red (n) hits to be used for subsequent data. NOTE In the G and H commands zero may be used as a parameter to mean no hits. If all four parameters are set to zero, one hit of the clear filter (which is the default) will occur.
n !L (0)	Arc length; n is number of 1.5° segments to be drawn (default is 240 segments, a complete circle).
!N	Similar to N, except for permanent picture definitions. See !'.
!'	Execute permanent picture definition. See !N.
[n]!R (1)	Rotated characters: n = 0 n = 4 n = 1 n = 5 n = 2 OR NO PARAMETER n = 6 n = 3 n = 7
!U (1)	Upright characters
[j][,j] !V (n)	Selects solid, dotted, or dashed lines (default is solid). This command selects a mode for all subsequent vectors until another !V command is encountered. n = 1 SOLID, no parameter. n = 2 DOTTED, one parameter. (The parameter refers to the space between dots along the axis with the larger vector component.)

TABLE 8-1. FORM DESIGN SYNTAX COMMANDS *(Continued)*.

Command	Meaning
	n = 3 DASHED, two parameters. (The two parameters refer to the distance on and off along the axis with the larger vector component.)
[i][,j] " ( )	Enter or exit Character Mode. NOTE Text Mode set "UNJUSTIFIED": Entering character mode requires one word. Each pair of characters within requires an additional word. (If the total number of characters in the text is odd, the odd character requires one word.) A carriage return, to be added to the line it follows, is equal to one character. The requirement for exiting character mode is equal to one character. Text Mode Set "LEFT-JUSTIFIED", "CENTERED", or "RIGHT-JUSTIFIED": Entering character mode requires two words. Each line within requires two additional words plus one word for each pair of characters. (If the total number of characters in the text is odd, the odd character requires one word.) A carriage return, to be added to the line it follows, is equal to one character. The requirement for exiting character mode is equal to one character.
"UNJUSTIFIED"	The arguments are illegal. The first character will be displayed with its lower left corner at the current position. Subsequent characters will be at positions determined by the rotation, spacing, and line feed values. The current position will be unchanged.

TABLE 8-1. FORM DESIGN SYNTAX COMMANDS *(Continued)*.

Command	Meaning
"LEFT-JUSTIFIED, CENTERED, or RIGHT-JUSTIFIED"	The current position should be at the lower left corner of the imaginary box used to justify the text. The arguments describe the size of the "box." The current position will be unchanged.

The following commands establish parameters to be used by the PRINT program in conjunction with a form:

[m][,n]\B (0)	Specify step size in X and Y axes.
j \C (0)	Set character size. NOTE A single argument to this command will be interpreted as a number of units. If two arguments are supplied, they will be used to specify a fraction of user units, the first number being the numerator, the second the denominator.
n \D (0)	Set spacing mode. n = 1 SINGLE SPACE n = 2 DOUBLE SPACE n = 3 TRIPLE SPACE
n \F (0)	Selects character set in BCD print programs. n = 0 COMMERCIAL n = 1 SCIENTIFIC
[m][,n]\I (0)	Specify left edge in X axis and top in Y axis.
n \L (0)	Set LINE SIZE.
[i][,j]\O (0)	Set offset from top left of form.

TABLE 8-1. FORM DESIGN SYNTAX COMMANDS *(Continued)*.

Command	Meaning
n \ P (0)	Set PAGE SIZE.
i,j \ S (0)	Specify overall size of form.
[m][,n] \ U (0)	Specify number of images in X and Y axes.
n \ V (0)	n = 1 for VARIABLE BLOCKING.
\ ← (0)	ROTATED image (Cine Mode).

S A M P L E F O R M

8.3 The following form design language was used to create the "Monthly Inventory Statement" form shown on page 64.

```
/SCALING
100,167S
1,4Z
1,2D

/PARAMETERS TO BE USED BY THE PRINT PROGRAM
134\L
64\P
132,63*2\S
0,-1\0

/PARAMETERS TO BE TYPED TO THE FORMS PROGRAM
/PUL/3
/360/

/PARAMETERS TO BE TYPED TO THE PRINT PROGRAM
/CAM/2

/MEDIUM LINES
1N
5,2B
,4D
132A -63U -132A 63U
-3J
132H
3J
26I -63V
46I -63V
24I -63V
12I -63V
12I -63V
N
1N
```

```
/THIN LINES
2N
3,0B
-13J
5R 132H -10J R
N
2N

/DASHED LINES (THIN)
3N
,1D
3,1!V
,4D
-8J
6R 132H -10J R
N
3N


/BOLD TEXT
4N
6,3B
2!C
132,3"MONTHLY INVENTORY STATEMENT"
N
4N

/LIGHT TEXT
5N
3,0B
O!C 3,5C 1E
,2D
J
"DATE"
122I
"PAGE"
-122I -3*2-1J
,4D
2!C
26,3"PART NUMBER" 26I
46"DESCRIPTION" 46I
24"VENDOR" 24I
12"QUANTITY
IN
STOCK" 12I
"QUANTITY
ON
ORDER" 12I
"QUANTITY
BACK
ORDERED" -12-12-24-46-26-2I -60J
1!C 2!R
2,63"FORM NO. 1037"
N
5N
```

DATE

MONTHLY INVENTORY STATEMENT

PAGE

PART NUMBER	DESCRIPTION	VENDOR	QUANTITY IN STOCK	QUANTITY ON ORDER	QUANTITY BACK ORDERED

FORM NO. 1037

Chapter 9
FR 80 STANDARD DATA FORMAT

GENERAL DESCRIPTION

9.1 The FR 80 standard data format is a binary language used to communicate instructions to the FR 80 Microfilm Recorder for production of general graphics output.

9.2 Considerations in the specification of this language are:

1. Minimal ambiguity in description of attributes
2. Compactness
3. Flexibility
4. Utilization of all FR 80 capabilities
5. Well-defined recovery from errors
6. Provision for high-speed searching for start of job, frame advance, or checkpoint commands

9.3 The FR 80 has the following characteristics:

1. 16,384 x 16,384 addressable points
2. 8 selectable beam intensity levels
3. 8 selectable beam spot sizes
4. 64 selectable character sizes
5. 8 selectable character rotations
6. Optional color selection
7. Font specification under program control
8. Incremental pulldown on unsprocketed roll cameras

9.4 Various cameras available have apertures which restrict the useable area of the raster. The apertures are centered on the addressable area. See table on page 8 for the number of addressable points provided by the different aperture sizes in the available cameras.

9.5 Data may be recorded in comic mode or cine mode. In comic mode, X coordinates refer to positions along the film, and Y coordinates refer to positions across the film. Frames follow each other in a succession from left to right along the film. For example:

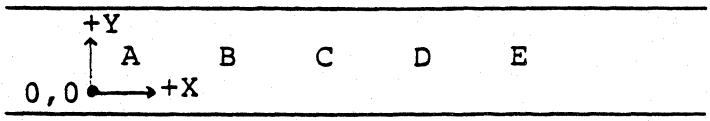

9.6 In cine mode, X coordinates refer to positions across the film, and Y coordinates refer to positions along the film; frames follow each other in a succession from top to bottom down the film. For example:

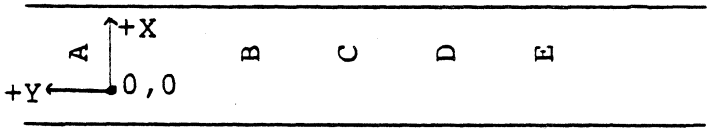

TAPE FORMAT

9.7 The basic unit of information supplied to the FR 80 is an 18-bit word whose bits are numbered 0-17 from left to right. On 7-track tape drives, this is three 6-bit characters in odd parity mode.

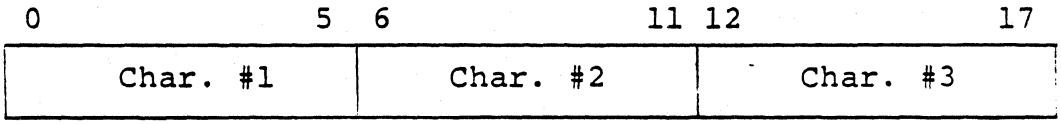

9.8 Data from 9-track drives is in the following form: the six low-order bits from each byte are used as data, the high-order two bits are ignored.

9.9 Tape records may be blocked in any size to a maximum of 512 18-bit words.

9.10 Encountering a file mark on the tape will cause a pause, with the message "END OF FILE" typed to the operator with accounting information.

COMMAND FORMAT

9.11 Commands may be one-word, two-word, or variable length. One-word commands specify movement on either the X or Y axes. Two-word commands provide for movement in both axes simultaneously. Variable length commands perform other control functions and text display. To determine which type of command is being examined, the high-order bits are interpreted in the following way:

Bit 0 - ON means draw a vector to specified point.

Bit 1 - ON means coordinate is relative to current point.
OFF means coordinate is an absolute position.

Bit 2 - ON means update position to specified point.
OFF means leave current position unchanged.

Bit 3 - ON means coordinate is a Y value.
OFF means coordinate is an X value.

9.12 If bit 0 and bit 2 are both off, this is the first word of a variable length command. Otherwise it is a coordinate command.

COORDINATE COMMANDS

9.13 Bits 4-17 contain the coordinate value. To determine if this is a one-word or two-word command, the following word is examined. If bits 0, 1, and 2 are off and bit 3 is on, this word is the second word of a two-word command and the 14 low-order bits represent the Y coordinate value.

9.14 To describe coordinate commands, we will refer to CX, the current X coordinate; CY, the current Y coordinate; SX, the X coordinate value specified by the command; and SY, the Y coordinate value specified by the command.

9.15 For one-word commands, if bit 3 (the Y bit) is on, bits 4-17 contain SY, and SX is zero for relative commands (bit 1 on), or SX=CX for absolute commands. Similarly, if bit 3 is off, bits 4-17 contain SX, and SY is zero for relative commands, or SY=CY for absolute commands. For two-word commands, SX is in bits 4-17 of word 1 and SY is in bits 4-17 of word 2.

9.16 Treating bits 0-2 as a 3-bit op code, the commands are:

Op Code	Meaning
0	Checkpoint delimiter or word two of a two-word command.
1	Move to specified point (set CX to SX and CY to SY).
2	Variable length command (see par. 9.17).
3	Move relative (CX=CX+SX, CY=CY+SY)*.
4	Draw a vector from CX,CY to SX,SY (but leave current point at CX,CY).
5	Draw a vector from CX,CY to SX,SY and move to SX,SY.
6	Draw a vector from CX,CY to CX+SX, CY+SY* (and don't move).
7	Draw a vector from CX,CY to CX+SX, CY+SY* and move current point to CX+SX, CY+SY*.

VARIABLE LENGTH COMMANDS - CHECKPOINT DELIMITERS

9.17 Variable length commands with bits 0-3 off are treated as checkpoint delimiters which may be searched for, independent of context.

Checkpoint Delimiters

9.18 All checkpoint delimiters cause exit from TEXT MODE if recording characters at regular speed. Checkpoint delimiters will not cause an exit from "high speed" TEXT MODE (see command 04).

9.19 No Operation

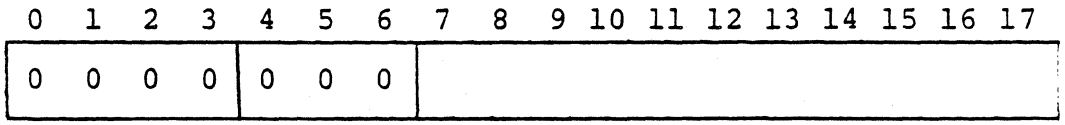

9.20 Frame Advance

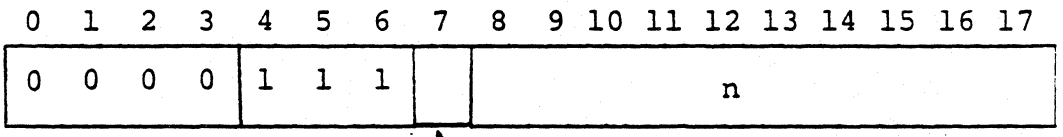

For the microfiche camera:
1 means step to the next fiche and ignore the rest of the bits in this command.
0 means advance n pages.

* All additions are performed modulo 16384, so negative numbers are represented in 2's complement form.

Advance film n frames, increment frame counter. One frame is a number of pulldowns appropriate to the camera and may be set by the operator.

9.21 End Job

0	1	2	3	4	5	6	7	8	9	10	11	12	13	14	15	16	17
0	0	0	0	0	0	1										n	

n = pause level. See pause level description in control interrupt command (par. 9.41). If n = 17_8 end of last job on tape assumed.

9.22 Start Job

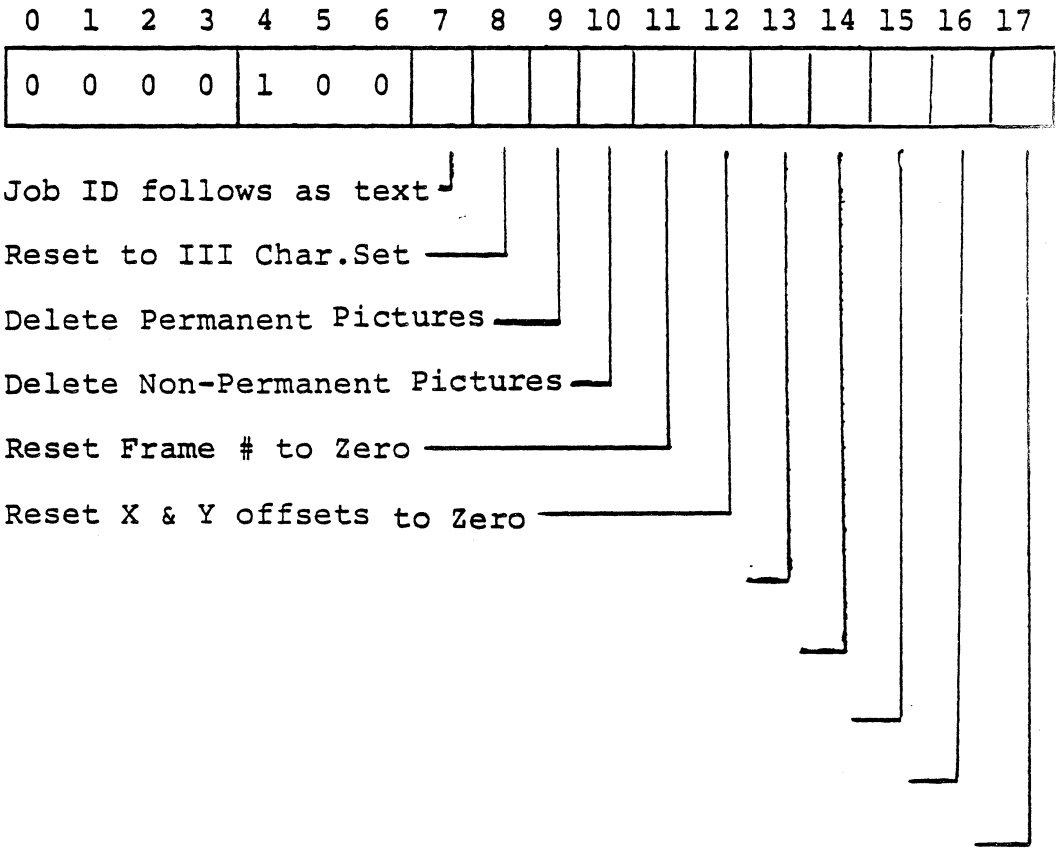

Types job ID if supplied, resets indicated parameters, strip chart mode, vector family mode, and establishes the following defaults: spot size = 0, intensity = 7, solid vector mode, upright characters, single hit with clear filter.

9.22A (Paragraph deleted.)

VARIABLE LENGTH COMMANDS - NOT CHECKPOINT DELIMITERS

9.23 The first word of all other variable length commands has the following format:

0	1	2	3 4 5 6 7 8	9 10 11 12 13 14 15 16 17
0	1	0	OP CODE	DATA

The following commands are currently defined:

OCT	DEC	
9.24	00	00 Incremental Film Advance

0	1	2	3	4	5	6	7	8	9 10 11 12 13 14 15 16 17
0	1	0	0	0	0	0	0	0	PULLDOWN

The data contains the number of camera pulldowns to be executed (0-511). The frame counter will not be incremented, and will not be treated as a frame delimiter. This command should not be used for microfiche.

9.25 01 01 Repeat Following Command Sequence

0	1	2	3	4	5	6	7	8	9 10 11 12 13 14 15 16 17
0	1	0	0	0	0	0	0	1	n

If $2 \leq n \leq 511$ n is the repeat count.
If n = 1 the repeat count is in the following word in this format:

0	1	2	3	4 5 6 7 8 9 10 11 12 13 14 15 16 17
0	0	1	0	REPEAT COUNT

If n = 0 terminate command sequence. Repeats may be nested to a depth of 8.

9.26 OCT DEC

02 02 Picture

0	1	2	3	4	5	6	7	8	9	10	11	12	13	14	15	16	17
0	1	0	0	0	0	0	1	0	t		p	n					

t = 0 define following command sequence as picture n

t = 1 end definition of picture (p = 1, n = 77_8) so that end definition is 202377_8.

t = 2 draw picture n

t = 3 delete definition for picture n

p = 1 permanent picture

p = 0 nonpermanent picture (definition usually lasts only through current job).

Definitions may not be nested, but requests to draw a picture may be included within a picture definition. While in process of drawing a picture, the request to draw pictures may be done to a depth of 8. After completing the drawing of a picture, the coordinates (CX and CY) will be reset to the point where they were before the picture was drawn.

9.27 03 03 Enter Justified-Type Mode

	0	1	2	3	4	5	6	7	8	9	10	11	12	13	14	15	16	17
Word 1	0	1	0	0	0	0	0	1	1				CHARACTER SIZE					

	0	1	2	3	4	5	6	7	8	9	10	11	12	13	14	15	16	17
Word 2	0	1	1				CHARACTER SPACING											

	0	1	2	3	4	5	6	7	8	9	10	11	12	13	14	15	16	17
Word 3	0	1	1	0	X DISPLACEMENT													

	0	1	2	3	4	5	6	7	8	9	10	11	12	13	14	15	16	17
Word 4	0	1	1	1	Y DISPLACEMENT													

The character size and spacing specified will apply to the current command only, and will not change the values used by subsequent type mode commands. The X and Y displacement values are added to CX and CY to specify the position of the lower left corner of the envelope for the first character of the following text. After completion of this command, CX and CY are unchanged.

Subsequent words contain text as described under Text Format (see par. 9.29) in Type Mode description (op code 04).

When a new line code (217_8) is encountered in the text, the following two words contain data as words 3 and 4 above, again followed by text. (If the new line code is in Field 1, Field 2 will be ignored.) An end of message code in the text terminates this command.

OCT DEC

9.28 04 04 Enter Type Mode (Nonjustified)

0	1	2	3	4	5	6	7	8	9	10	11	12	13	14	15	16	17
0	1	0	0	0	0	1	0	0									

The first character will be displayed with its lower left corner at the current point. Subsequent characters will be at positions determined by the rotation, spacing, and line feed values. The current position will be unchanged by this command.

bit 9

1 means output characters with proportional spacing.
0 means output characters with mono spacing.

bit 11

1 means output text at high speed (if high-speed page print option is available).
0 means output text at regular speed.

9.29 Text Format - Text for display on the FR 80 will be packed two characters per 18-bit word. They will be in III standard code.

Half-word Format:

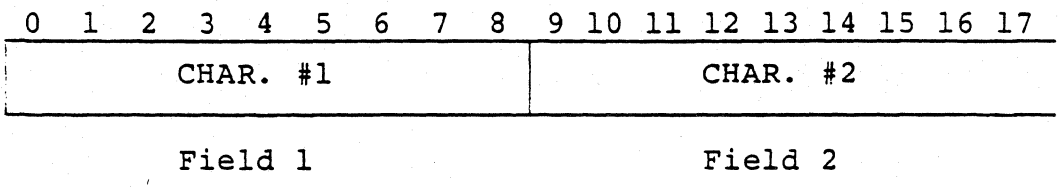

If the high-order bit of one of these 9-bit fields is on, the remaining eight bits are a printing character; if the bit is off, the remaining eight bits are a control character. Text will be terminated by an end of message character (203_8). Text used in conjunction with the following commands must be packed in the half-word format: START JOB, JUSTIFIED TYPE MODE, CONTROL INTERRUPT, FICHE TITLE.

Notes

1) For proportionally spaced text the number entered with the Set Character Spacing (Code 11_8) command is the intercharacter spacing (the distance from the right of one character to the left of the next).

2) Checkpoint delimiters will not cause an exit from high-speed type mode.

3) If proportional spacing or multiple hits are specified, text recording is at regular speed only.

OCT DEC

9.30 05 05 Set Intensity

0	1	2	3	4	5	6	7	8	9	10	11	12	13	14	15	16	17
0	1	0	0	0	0	1	0	1	f			INTENSITY					

Bits 15-17 (12-17 if the gray level option is installed) of the data contain the intensity to be used when the color filter specified by bits 9-11 is in place. When specifying the 6-bit intensity for the gray-level option, the order of the 2 octal digits must be reversed. For example, to specify intensity 57_8 enter the number 75_8. The filter specification for bits 9, 10, and 11 is as follows:

$f = 000_2$ clear; $f = 001_2$ (unspecified); $f = 010_2$ red; $f = 011_2$ magenta; $f = 100_2$ green; $f = 101_2$ yellow; $f = 110_2$ blue; $f = 111_2$ cyan.

9.31 06 06 Set Spot Size

0	1	2	3	4	5	6	7	8	9	10	11	12	13	14	15	16	17
0	1	0	0	0	0	1	1	0	f						SPOT SIZE		

Bits 15-17 of the data contain the spot size to be used when the filter specified by bits 9-11 is in place. (See command 05 for filter specification.) Changing spot size requires about 50 msec.

9.32 07 07 Set Character Size*

0	1	2	3	4	5	6	7	8	9	10	11	12	13	14	15	16	17
0	1	0	0	0	0	1	1	1				CHARACTER SIZE					

Bits 12-17 contain the FR 80 hardware character size to be used in subsequent 04 commands.

9.33 10 08 Set Character Rotation

0	1	2	3	4	5	6	7	8	9	10	11	12	13	14	15	16	17
0	1	0	0	0	1	0	0	0							ROTATION		

The data is a rotation number to be used in subsequent text display commands. A rotation value of zero corresponds to upright characters. Successive values are rotated 45° counterclockwise.

* Not ordinarily useful; see octal 24 command.

OCT DEC

9.34 11 09 Set Character Spacing

0	1	2	3	4	5	6	7	8	9 10 11 12 13 14 15 16 17
0	1	0	0	0	1	0	0	1	CHARACTER SPACING

The data is a spacing number (from the left of one character to the left of the next for monospaced text; from the right of one character to the left of the next for proportionally spaced text) to be used in subsequent 04 commands.

9.35 12 10 Set Text Line Spacing

0	1	2	3	4	5	6	7	8	9 10 11 12 13 14 15 16 17
0	1	0	0	0	1	0	1	0	LINE SPACING

The data is a center line spacing number (from the bottom of one line to the bottom of the next line) to be used in subsequent 04 commands.

9.36 13 11 Output Page # or Frame # to Film

0	1	2	3	4	5	6	7	8	9	10	11	12	13	14 15 16 17
0	1	0	0	0	1	0	1	1						# OF DIGITS

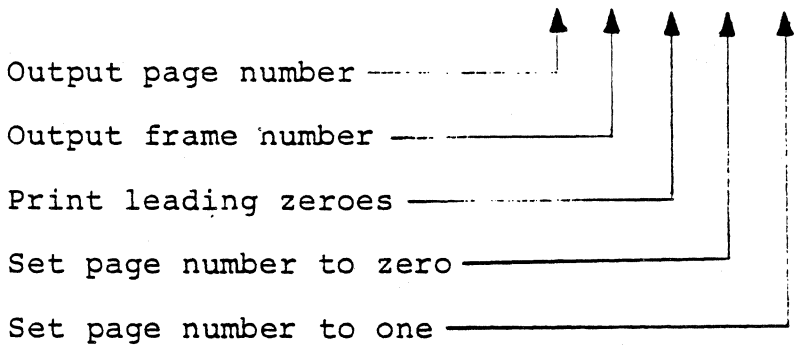

The page or frame number will be output at the current position as though a 04 command had been encountered.

OCT DEC

9.37 14 12 Select Color (or Multiple Exposure)

0	1	2	3	4	5	6	7	8	9	10	11	12	13	14	15	16	17
0	1	0	0	0	1	1	0	0									

followed by:

0	1	2	3	4	5	6	7	8	9	10	11	12	13	14	15	16	17
x	1	BLUE COUNT				GREEN COUNT				RED COUNT				CLEAR COUNT			

(The above word may be omitted if the counts are all zero and another count word follows.)

If x is zero another count word follows:

0	1	2	3	4	5	6	7	8	9	10	11	12	13	14	15	16	17
1	0	CYAN COUNT				YELLOW COUNT				MAGENTA COUNT							

This word is permitted only if a subtractive filter system is installed.

The counts represent the number of times the film will be exposed with the indicated filter in place. (If a subtractive filter system is installed, the red, green, and blue filters will be simulated by inserting two filters simultaneously in the light path.) If the specified count for all filters is zero, a count of one for the clear filter is assumed. Any film advance is equivalent to selecting the clear filter with the number of hits previously specified for it (or one if zero).

If the color select command calls for more than one color per frame, the select command acts as a repeat and must comply with repeat nesting rules.

When a given filter is in place, the intensity and spot size appropriate to that filter, as specified by the 05 and 06 commands, will be in effect.

9.38 15 13 Plot Current Point

0	1	2	3	4	5	6	7	8	9	10	11	12	13	14	15	16	17
0	1	0	0	0	1	1	0	1									

Intensity

Set intensity

Spot size

(Changing spot size requires 50 milliseconds)

Set spot size

Set size or intensity

If the "set size or intensity" bit is on, the spot size and/or intensity may be set for intensification of this point only. The spot size and intensity for subsequent commands will remain as specified by the 05 and 06 commands.

OCT DEC

9.39 16 14 Select Vector Mode

0	1	2	3	4	5	6	7	8	9 10 11 12 13 14 15	16 17
0	1	0	0	0	1	1	1	0		MODE

Bits 16 and 17 contain a code for vector drawing mode interpreted in the following way:

Bit 16	Bit 17	
0	0	Normal solid vectors (no words follow)
0	1	Dashed vectors; two words follow containing the approximate number of points the beam will be on, and the approximate number of points the beam will be off per dashing cycle. The lengths will be along the axis which has the larger vector component.

0	1	2	3	4 5 6 7 8 9 10 11 12 13 14 15 16 17
1	1	1	0	LENGTH "ON"

0	1	2	3	4 5 6 7 8 9 10 11 12 13 14 15 16 17
0	1	1	0	LENGTH "OFF"

1	0	Dotted lines; one word follows containing the spacing between dots along the axis that has the larger vector component.

0	1	2	3	4 5 6 7 8 9 10 11 12 13 14 15 16 17
0	1	1	0	POINT SPACING

OCT DEC

9.40 17 15 Draw Arc

0	1	2	3	4	5	6	7	8	9 10 11 12 13 14 15 16 17
0	1	0	0	0	1	1	1	1	STARTING ANGLE

0	1	2	3	4 5 6 7 8 9 10 11 12 13 14 15 16 17
0	1	1	0	RADIUS

0	1	2	3	4 5 6 7 8 9 10 11 12 13 14 15 16 17
1	1	0	0	ARC LENGTH

For the purpose of drawing arcs and circles, a circle is divided into 240 1.5° sectors. The arc length is specified by the number of sectors to be drawn clockwise from the starting angle. The starting angle is specified by the number of sectors clockwise from vertical.

The center of the arc will be the current point. Drawing an arc will not change the current point.

9.41 20 16 Control Interrupt

0	1	2	3	4	5	6	7	8	9	10	11	12	13	14 15 16 17
0	1	0	0	1	0	0	0	0						

Output time to TTY

Output frame number to TTY

Clear Film Gate

Operator Message follows

--- not defined

Pause control level

Bits 9-13 will cause the function indicated to be performed if on.

Bits 14-17 will be a pause control level. All bits on (17_8) will be an unconditional pause. All bits off will

never pause. Intermediate levels will cause a pause if their value exceeds a parameter entered by the FR 80 operator. When the pause occurs, the pause control level will be typed on the Teletype.

The text for an operator message will be in the same format as specified for the 04 command.

OCT DEC

9.42 21 17 Verify Camera and Select Cine or Comic Mode

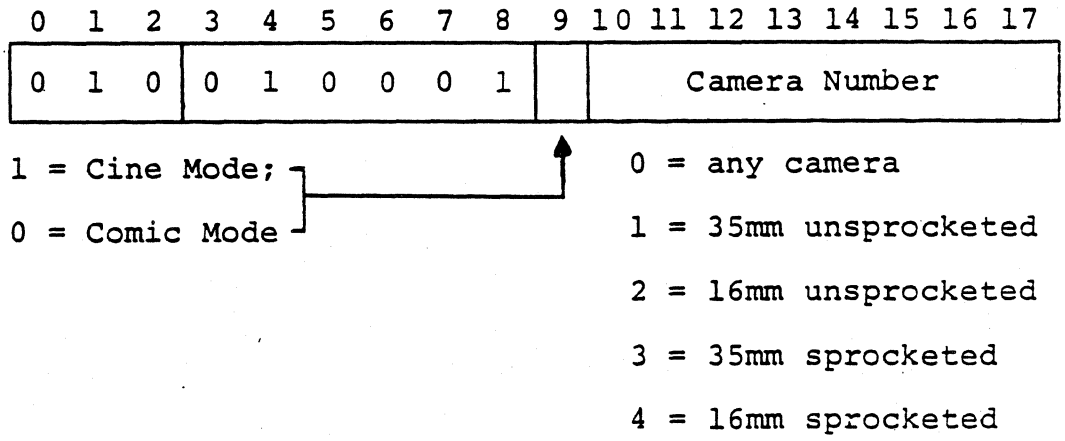

If the specified camera is not in place, the machine will pause after indicating to the operator that another camera is required.

9.43 22 18 Draw Vector Family

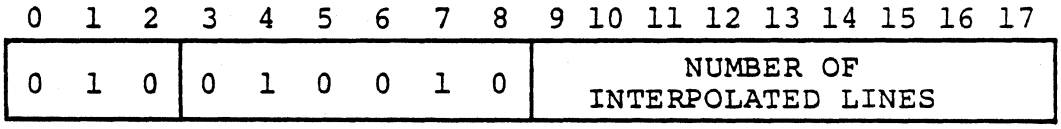

This command conditions the FR 80 to interpolate the specified number of lines between the next two vectors produced by commands with bit 0 on. (Those commands may be either one- or two-word type.) Both specified vectors will also be drawn. At the completion of the drawin of these vectors, the current point will be restored to the position it was when the Draw Vector Family command was encountered. If the number of interpolated lines is zero, then a second word follows specifying the actual number of interpolated lines:

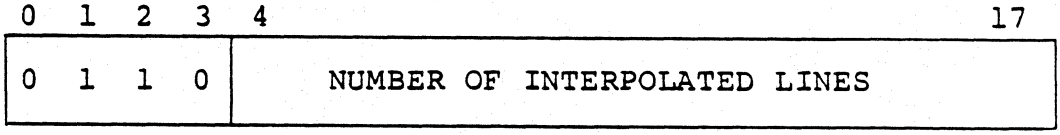

OCT DEC

9.44 23 19 Set X and Y Offsets

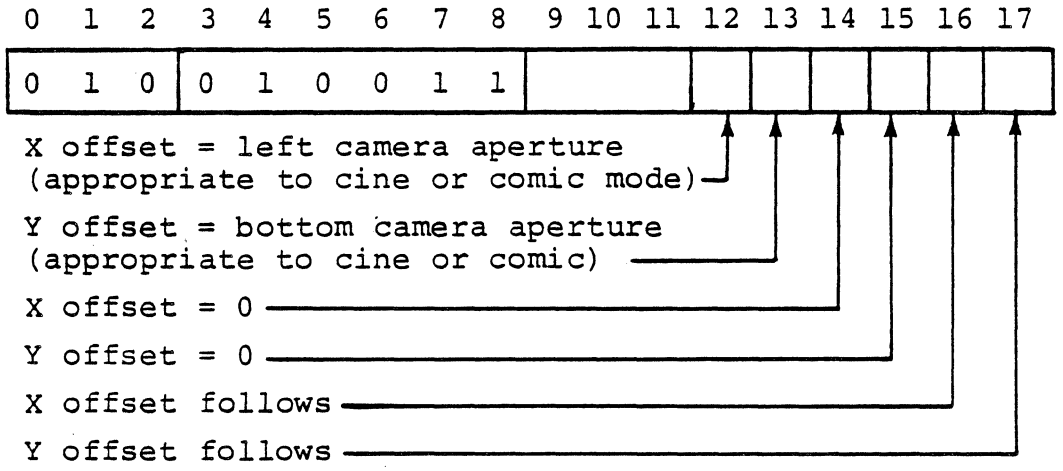

if bit 16 on:

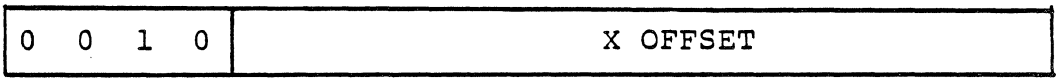

if bit 17 on:

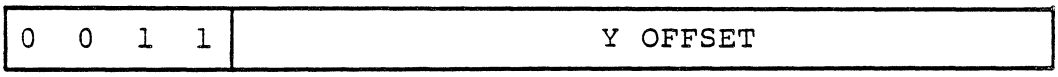

The specified X and Y offsets will be added to all subsequent coordinates.

9.45 24 20 Select Character Height

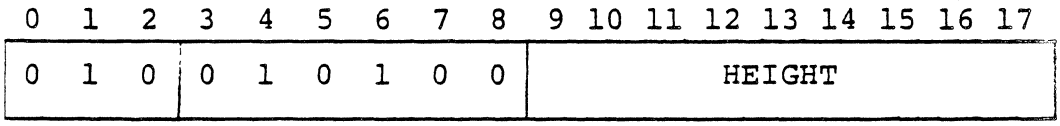

The largest character size not greater than "HEIGHT" will be selected. If HEIGHT = 0, a character size appropriate to the specified spacing for monospaced text will be selected.

OCT DEC

9.46 25 21 Define Character Set

0	1	2	3	4	5	6	7	8	9 10 11 12 13 14 15 16 17
0	1	0	0	1	0	1	0	1	n

n = number of character equivalences to follow. (A checkpoint delimiter may also be used to terminate this command.) A character equivalence is a word in the following format (where the III code equivalent is a printing character):

0	1	2	3	4	5	6	7	8	9	10 11 12 13 14 15 16 17
1	CODE FROM TAPE								1	III CODE EQUIVALENT

9.47 26 22 Assign Character Definition to Code

0	1	2	3	4	5	6	7	8	9	10 11 12 13 14 15 16 17
0	1	0	0	1	0	1	1	0		n

n = Character code assigned.

Following this are words containing character descriptions in the following 6-bit codes:

00-07	Terminates character with 1-8 character spaces
10	Provides 8 character spaces and continues to expect another terminator
11	Beam off (character starts with beam off)
12	Beam on
13	Terminates character without spacing
14	Draw east
15	Draw northeast (slope = 1)
16	Draw northeast (slope = 7/5)
17	Draw northeast (slope = 2)
20	Draw northeast (slope = 14/5)
21	Draw north
22	Draw northwest (slope = -14/5)
23	Draw northwest (slope = -2)
24	Draw northwest (slope = -7/5)
25	Draw northwest (slope = -1)
26	Draw west

	27	Draw southwest (slope = 1)
	30	Draw southwest (slope = 7/5)
	31	Draw southwest (slope = 2)
	32	Draw southwest (slope = 14/5)
	33	Draw south
	34	Draw southeast (slope = -14/5)
	35	Draw southeast (slope = -2)
	36	Draw southeast (slope = -7/5)
	37	Draw southeast (slope = -1)
	76-41	Repeat following stroke 2 - 31 times.

	OCT	DEC	
9.48	27	23	--- not defined

OCT DEC

9.49 30 24 Fiche Title

0	1	2	3	4	5	6	7	8	9	10	11	12	13	14	15	16	17
0	1	0	0	1	1	0	0	0									

A fiche title specification follows this command packed in the half-word format (see command 04). The end of message control character (203_8) terminates the specification. Details of the fiche title specification are described on page 46. This command causes the title on the current fiche to be completed and causes subsequent data to be recorded on a new fiche. The fiche title specification stays in effect until changed.

9.50 ERROR MESSAGES

The FR 80 Data Format Displayer program can type any of the following error messages on the Teletype:

Message	Meaning
DLM	Invalid checkpoint delimiter
UNC	Undefined variable length command
TMR	Too many repeats (nested too deeply)
NAM	Format error in picture name command
TMP	Too many picture calls (nested too deeply)
TMN	Too many names (available storage exceeded)
CON	Undefined control character
PAG	Format error in command 13_8 (output page or frame no.)

To continue processing after an error, the operator can use the SCAN command to continue with the next checkpoint delimiter, the next frame, or the next job.

9.51 SUMMARY OF FR 80 DATA FORMAT

0000	Escape checkpoint delimiter
000	No op
001	End job
010	--- not defined
011	--- not defined
100	Start job
101	--- not defined
110	--- not defined
111	Frame advance
0001	Y coordinate (second word)
0010	X move absolute
0011	Y move absolute
0100	Escape (see below)
0101	Escape (see below)
0110	X move relative
0111	Y move relative
1000	X vector not moving
1001	Y vector not moving
1010	X vector absolute move
1011	Y vector absolute move
1100	X vector relative not move
1101	Y vector relative not move
1110	X vector relative move
1111	Y vector relative move

Escape codes (octal)

00	Incremental film advance
01	Repeat
02	Picture name
03	Enter justified type
04	Enter nonjustified type
05	Set intensity
06	Set spot size
07	Set character size
10	Set character rotation
11	Set character spacing
12	Text line spacing
13	Page # or frame # (accounting to film)
14	Select color mode
15	Plot current point
16	Select vector mode
17	Draw arc
20	Control interrupt
21	Verify camera and select rotation
22	Draw vector family
23	Set X and Y offsets
24	Select character height
25	Define character set
26	Assign character definition to code
27	--- not defined
30	Fiche title
31	Optical merge
32	Font selection
33	Justify

COMp 80 SUPPLEMENT TO
FR 80 STANDARD DATA FORMAT

9.52 OCT DEC

31 25 Optical Merge

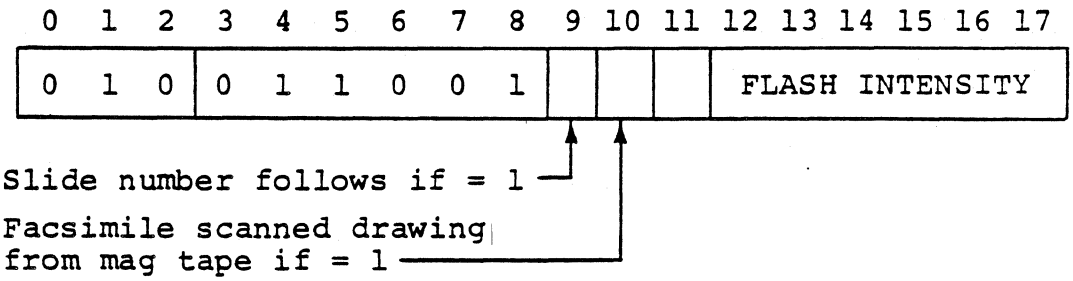

NOTE: If the slide number is omitted, the slide in place, or the next image on the drawing tape, will be used.

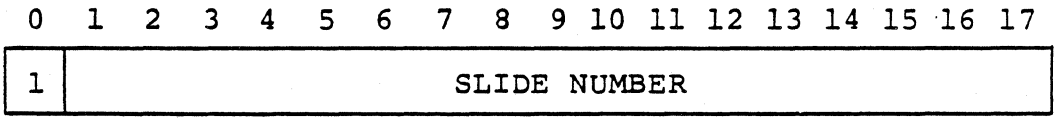

9.53 OCT DEC

32 26 Font Selection

0	1	2	3	4	5	6	7	8	9 10 11 12 13 14 15 16 17
0	1	0	0	1	1	0	1	0	

0	1	2	3 4 5 6 7 8 9 10 11 12 13 14 15 16 17
0	1	TANGENT OF ITALIC ANGLE (Binary point to the left of bit 2)	

This word is optional; the font will be displayed without obliqueness if this word is omitted or if the selected font will not permit italicization.

0	1	2	3 4 5 6 7 8 9 10 11 12 13 14 15 16 17
1	0	CHARACTER ASPECT RATIO x 10000	

This word is optional. It is used to permit expanding or condensing characters. Values less than 10000 (decimal) result in a condensed font; values more than 10000 result in an expanded font. If equal to 10000, or omitted, or a non-graphic arts font specified, the font will be used as designed.

0	1	2	3 4 5 6 7 8 9 10 11 12 13 14 15 16 17
1	1	FONT NUMBER	

9.54 OCT DEC

33 27 Justify

0	1	2	3	4	5	6	7	8	9	10	11	12	13	14	15	16	17
0	1	0	0	1	1	0	1	1	REMAINDER SPACE COUNT								

0	1	2	3	4	5	6	7	8	9	10	11	12	13	14	15	16	17
1	REMAINDER LETTER COUNT								sign	LETTER SPACE							

This word is optional. It is used if letter spacing is to be used. The specified letter space value will be added to (or subtracted from, according to the sign) normal letter spacing. The remainder letter count specifies the number of characters that will receive one additional scope point of letter space, or one scope point less of letter space according to the sign of the letter space value. Spacing for space characters (40_8) is not affected.

0	1	2	3	4	5	6	7	8	9	10	11	12	13	14	15	16	17
0	1	sign	ADDITIONAL WORD SPACE														

This word specifies an additional increment to be used when a space character (40_8) is encountered. The specified value will be added to (or subtracted from, according to the sign) normal space width. The first "Remainder Space Count" spaces will also receive one additional scope point of spacing, or one scope point less of spacing according to the sign of the additional word space.

OCT DEC

9.55 04 04 Enter Type Mode (Nonjustified)

0	1	2	3	4	5	6	7	8	9	10	11	12	13	14	15	16	17
0	1	0	0	0	0	1	0	0									

The first character will be displayed with its lower left corner at the current point. Subsequent characters will be at positions determined by the rotation, spacing, and line feed values. The current position will be unchanged by this command.

bit 9

1 means output characters with proportional spacing.
0 means output characters with mono spacing.

bit 10

--- not defined.

bit 11

1 means output text at high speed (if high-speed page print option is available).
0 means output text at regular speed.

bit 12

1 means update current position to end of last character printed.
0 means current position remains unchanged.

NOTES:

If bit 12 is set to 1, the justify elements will not be initialized before printing. This means that a single Justify command (code 33_8) may be used for multiple piece lines.

With graphic arts characters, the position after print will be the integer portion of the DACs (full scope point values); the fractional portion is lost.